ADDENDUM

MODEL: Model 280B Series Recorder/Reproducer Date: May 18, 1978

PUBLICATION AFFECTED: Instruction and Maintenance Manual ADDENDUM NO. 02

REASON FOR ADDENDUM Provide instructions for decoding CODE block on system labels (name plate).

The following information is provided on how to "decode" the CODE block on system labels for Model 280B Series Recorder/Reproducer. The purpose of these instructions is to ensure that the user supplies the factory with the correct information, on his particular recorder/reproducer, from the name plate affixed to the recorder. This is of utmost importance when ordering spare parts or concerns service information. Figure 1 depicts a typical name plate for a Model 280B and what the CODE numbers represents.

XXXX

01	NAB 3.75 - 7.5 IPS
02	NAB 7.5 - 15 IPS
03	IEC 7.5 - 15 IPS
04	NAB 15 - AES 30 IPS
05	IEC 15 - AES 30 IPS
06	DIN/IEC 3.75 - 7.5 IPS

FT	Mono Full Track (.25")
01	Mono Half Track (.25")
02	Stereo Two-Track (.25")
03	Quad Four-Track (.50")
24	Stereo Four-Track (.25")
44	Quad Four-Track (.25")

NOTE:

This addendum should become a permanent part of the manual until such time as the manual is revised (reprinted). This addendum should be placed at the front of the manual.

Dictaphone
Audio/Electronics Division

Scully

Recording Instruments

Model 280B Series Recorder/Reproducers

Instruction and Maintenance Manual

AUDIO/ELECTRONICS DIVISION OF DICTAPHONE CORPORATION
475 Ellis Street, Mountain View, California 94043 U.S.A.
(415) 968-8389 TLX 345524

July 1977
Catalog No. 200612-03
Printed in U.S.A.

Serial No.: _____

Date Received: _____

WARRANTY

SCULLY RECORDING INSTRUMENTS

DICTAPHONE VOICE FREQUENCY COMMUNICATIONS INSTRUMENTS

Dictaphone Corporation

WARRANTY CONDITIONS: THERE ARE NO WARRANTIES, EXPRESSED OR IMPLIED, INCLUDING ANY WARRANTY OF MERCHANTABILITY, BEYOND THOSE STATED HEREIN OR WHICH EXTEND BEYOND THE DESCRIPTION OF THE EQUIPMENT.

Dictaphone warrants the products of its manufacture to be free from defects in workmanship and material under normal and proper use and service for the appropriate periods specified below. Dictaphone assumes no obligation to repair or replace equipment which has been altered or repaired by other than Dictaphone approved procedure; been subject to misuse, misapplication, improper maintenance, negligence or accident; had its serial number or any part thereof altered, defaced, or removed; or been used with parts other than those approved by Dictaphone (except standard tapes, transistors, diodes, fuses or lamps).

DICTAPHONE'S OBLIGATIONS ARE LIMITED TO REPAIR OR REPLACEMENT OF BROKEN OR DEFECTIVE PARTS OR, AT THE OPTION OF DICTAPHONE, TO REFUND OF THE PURCHASE PRICE. THE FOREGOING ARE PURCHASER'S EXCLUSIVE REMEDIES. DICTAPHONE ASSUMES NO LIABILITY FOR SPECIAL OR CONSEQUENTIAL DAMAGES.

All Dictaphone and Scully instruments are warranted to be free from defects in materials and workmanship for one year to the original using purchaser except for motors and heads such as tape Reproduce, Record and Erase Heads, which are warranted for 90 days. Dictaphone will replace all parts free of charge for 90 days. Thereafter, Dictaphone will replace all parts, except for motors and heads, free of charge, except for labor, during the balance of the warranty period.

The original using buyer must properly fill out and send the warranty card to the factory within ten days from delivery to establish beginning of warranty period. Failure to do so will require evidence of the bill of sale to establish warranty claim.

In all warranty transactions involving equipment sold through a Dictaphone or Scully franchised dealer, distributor, or exporter, it is the responsibility of the dealer, distributor, or exporter to repair or replace the defective parts. Dictaphone will provide said agent with replacement parts covered under the warranty.

When necessary to return parts or equipment for replacement or repair, please write, wire or phone the Division Service Department in Mountain View for return authorization, supplying the following:

a. Identify the part in question using the part number and description in the parts manual list.
b. Identify the type, model number and serial number of the unit in which it is used, giving the date of purchase and name of distributor or supplier.
c. Describe the nature of the defect and reason for replacement or service.

PLEASE DO NOT return any part of equipment until specifically requested to do so. Unless otherwise agreed, transportation charges to return parts or equipment must be prepaid.

AUDIO/ELECTRONICS DIVISION OF DICTAPHONE CORPORATION
475 ELLIS STREET, MOUNTAIN VIEW, CALIFORNIA 94043 • TELEPHONE (415) 968-8389

CONTENTS

		Page
SECTION 1.	GENERAL INFORMATION	1-1
1.1	GENERAL	1-1
1.2	TAPE TRANSPORT	1-4
1.3	ELECTRONIC ASSEMBLY	1-4
1.4	HEAD ASSEMBLY	1-4
1.5	OPTIONAL AND ACCESSORY EQUIPMENT	1-4
SECTION 2.	INSTALLATION	2-1
2.1	GENERAL	2-1
2.2	UNPACKING	2-1
2.3	CONSOLE MOUNTING	2-1
2.4	RACK MOUNTING	2-1
2.5	CABLING INTERCONNECTIONS	2-3
SECTION 3.	OPERATION	3-1
3.1	GENERAL	3-1
3.2	TAPE THREADING	3-1
3.3	SELECTING SPEED AND APPLYING POWER	3-1
3.4	PLAYBACK MODE	3-1
3.5	STOPPING THE UNIT	3-1
3.6	RECORD MODE	3-1
3.7	SYNC MODE	3-3
3.8	EDIT MODE	3-3
SECTION 4.	PREVENTIVE MAINTENANCE	4-1
4.1	GENERAL	4-1
4.2	CLEANING	4-1
4.3	LUBRICATION	4-1
4.4	DEMAGNETIZING	4-1
SECTION 5.	FUNCTIONAL CHECKS AND ADJUSTMENTS	5-1
5.1	GENERAL	5-1
5.2	Functional Check	5-1
SECTION 6.	THEORY OF OPERATION	6-1
6.1	ELECTRONICS ASSEMBLY	6-1
6.2	RECORD MODE	6-1

CONTENTS (Continued)

		Page
SECTION 6.	THEORY OF OPERATION (Continued)	6-1
6.3	PLAY MODE	6-1
6.4	SYNC MODE	6-1
6.5	SQUELCH CIRCUIT	6-1
6.6	TAPE TRANSPORT ASSEMBLY	6-1
6.7	CONSTANT TENSION	6-1
6.8	TRANSPORT LOGIC	6-1
SECTION 7.	MAINTENANCE	7-1
7.1	MECHANICAL ADJUSTMENT	7-1
7.2	BRAKE ADJUSTMENT	7-1
7.3	Tape Head Assembly Adjustments	7-1
7.4	Motion Sense Adjustment	7-3
7.5	Tension Posts	7-3
7.6	Pinch Roller Adjustment	7-6
7.7	Constant Tension Adjustment	7-8
7.8	ATL Adjustments	7-9
7.9	CHECKOUT AND ALIGNMENT PROCEDURES	7-9
7.10	Test Equipment Required	7-10
7.11	Preliminary Procedures	7-10
7.12	Playback Alignment	7-10
7.13	Record Alignment	7-12
7.14	Record Bias Set	7-12
7.15	Record Calibrate Alignment	7-16
7.16	Record Equalization	7-16
7.17	Erase Alignment	7-16
7.18	Depth of Erase	7-16
7.19	Signal-to-Noise Ratio	7-16
7.20	Distortion	7-16
7.21	Flutter	7-17
SECTION 8.	SCHEMATIC DIAGRAMS AND PARTS LIST	8-1
8.1	GENERAL	8-1

ILLUSTRATIONS

		Page
1-1	Professional Recorder/Reproducer Series 280B	1-1
1-2	Remote Control Unit Accessory	1-5
2-1	Mounting Dimensions	2-2
2-2	Interconnection Diagram	2-4
2-3	Power Supply Jumper	2-5
3-1	Controls and Indicators	3-2
3-2	Tape Threading Path	3-3
6-1	System Block Diagram	6-2
6-2	Transport, Bottom View	6-3
7-1	Brake Adjustments	7-2
7-2	Suggested Method of Adjusting Brake Torque	7-3
7-3	Head Adjustment	7-4
7-4	Motion Sense Adjustment	7-5
7-5	Tension Post Adjustments	7-6
7-6	Pinch Roller Adjustment	7-6
7-7	Power Supply	7-7
7-8	Constant Tension Adjustment Procedures	7-8
7-9	Constant Tension Assembly	7-9
7-10	ATL Adjustment	7-9
7-11	Initial Test Setup	7-10
7-12	Electronics Assembly, Top View	7-11
7-13	Equalization PWA Adjustments	7-12
7-14	Record/Playback Amplifier PWA Adjustment and Test Points	7-13
7-15	Regulator, Bias Oscillator and Amplifier PWA	7-14
7-16	Bias Amplifier PWA Adjustment and Test Points	7-15
8-1	Transport Logic, Schematic Diagram	8-3
8-2	Regulator, Bias Oscillator and Amplifier PWA	8-5
8-3	Bias Amplifier PWA, Schematic Diagram	8-7
8-4	Record/Playback Amplifier PWA, Schematic Diagram	8-9
8-5	Record/Playback Equalization PWA	8-11
8-6	Motherboard PWA Schematic Diagram	8-13
8-7	Primary Power Supply, Schematic Diagram	8-15
8-8	Relay Control Chassis Interconnect	8-17
8-9	Erase Head Matching Board Schematic Diagram	8-19
8-10	Motion Direction Sensor PWA	8-21
8-11	Squelch PWA	8-21
8-12	Remote Control	8-22
8-13	Line Amplifier PWA Monitor and Speaker Assembly	8-23
8-15	Transport Assembly (1 of 2)	8-31

ILLUSTRATIONS (Continued)

8-15 Transport Assembly (2 of 2) 8-32
8-16 Transport Subassembly (sheet 1 of 2) 8-35
8-16 Transport Subassembly, (sheet 2 of 2) 8-37
8-17 Interconnecting Cable Assembly 8-39
8-18 Tape Break Switch Assembly 8-41
8-19 Transport Control Chassis Assembly 8-43
8-20 Capstan Motor Kit 8-45
8-21 Pinch Roller Assembly 8-47
8-22 Dancer Assembly 8-49
8-23 Tape Break Arm Assembly 8-51
8-24 Head Bridge Assembly 8-55
8-25 Pinch Roller Connecting Rod Assembly 8-57
8-26 ATL Solenoid Assembly 8-59
8-27 Primary Power Supply 8-63
8-28 Torque Motor & Brake Assembly, Supply 8-65
8-29 Torque Motor and Brake Assembly, Take-Up 8-67
8-30 ATL Linkage Assembly 8-69
8-31 Turntable Reel Assembly Parts Location 8-70
8-32 Transport Control Logic PWA 8-75
8-33 Switch Plate Assembly 8-77
8-34 Transport Control Logic Harness Assembly 8-79
8-35 Transport Control Power Harness Assembly 8-81
8-36 Capstan Motor Assembly 8-83
8-37 Scrape Filter Assembly 8-85
8-38 Record Head Assembly 8-87
8-39 Playback Head Assembly 8-89
8-40 Head Cable Assembly 8-91
8-41 Erase Head Assembly 8-93
8-42 PWB and Erase Head Cable Assembly, Full-Track 8-95
8-43 PWB and Erase Head Cable Assembly, 4-Track 8-97
8-44 Power Supply PWA 8-99
8-45 Torque Motor Assembly 8-101
8-46 Torque Motor Brake Plate Assembly 8-103
8-47 Motion Direction Sensor PWA 8-104
8-48 Solenoid Brake Plate Assembly 8-105
8-49 Brake Plate Assembly 8-106
8-50 Electronics Assembly, Primary 8-107
8-52 Electronics Chassis Subassembly 8-111
8-53 Bias Amplifier, Schematic Diagram 8-115
8-54 Motherboard PWA 8-119
8-55 Regulator, Bias Oscillator and Amplifier PWA 8-125
8-56 Record/Playback Control Panel Assembly 8-129
8-57 Record/Playback Equalization PWA 8-133
8-58 Record/Playback PWB Subassembly 8-135
8-59 Control Panel Harness 8-137
8-60 Squelch PWA 8-139

ILLUSTRATIONS (Continued)

8-61 Record/Playback Amplifier PWA 8-143
8-62 Console Assembly 8-145
8-66 Remote Control Assembly 8-153
8-68 Monitor Speaker Panel Assembly 8-155
8-69 LAA 500 Line Amp PWA 8-157
8-70 Tension Sensor PWA 8-159
8-71 Light Sensor Assembly 8-160

TABLES

1-1 Models of 280B Series Recorder/Reproducer 1-2
1-2 Specifications 1-2

2-1 Power Supply Jumper 2-3

6-1 Transport Logic Operation 6-5

8-1 Schematic Diagrams and Parts List 8-24
8-2 Abbreviations 8-161
8-3 Manufacturers Code Numbers and Addresses 8-163

SECTION 1
GENERAL INFORMATION

1.1 GENERAL

The Scully 280B Recorder/Reproducer, Figure 1-1, is a professional magnetic tape recorder designed primarily for use in recording studios, broadcasting stations, and other applications that require exacting performance specifications and reliability standards. The complete unit consists of a tape transport mechanism and electronics assembly. The equipment can be mounted in a console or a standard 19-inch (48.26 cm) equipment rack. The configurations of the 280B Series are listed in Table 1-1. Complete specifications for the 280B Series are contained in Table 1-2.

Figure 1-1. Professional Recorder/Reproducer Series 280B

Table 1-1. MODELS OF 280B SERIES RECORDER/REPRODUCER

MODEL NUMBER	DESCRIPTION	TAPE WIDTH (INCH)
280B-FT	One-Channel, Full-Track (Mono)	0.25
280B-1	One-Channel, Two-Track (Half-Track Mono)	0.25
280B-2	Two-Channel, Two-Track (Stereo)	0.25
280B-4	Four-Channel, Four-Track (Quad)	0.50
280B-24	Two-Channel, Four-Track (Quarter-Track Stereo)	0.25
280B-44	Four-Channel, Four-Track (Quad)	0.25

Table 1-2. SPECIFICATIONS

Frequency Response

Using 3M 206 tape, or equivalent:

in/s	cm/s	Frequency Response
30.00	76.2	±2 dB at 50 Hz to 20 kHz
15.00	38.10	±2 dB at 30 Hz to 18 kHz
7.50	19.05	±2 dB at 30 Hz to 15 kHz
3.75	9.52	±2 dB at 30 Hz to 10 kHz

Signal-to-Noise Ratio

Using 3M 206 tape, or equivalent, at peak record level of 500 nWb/m, with weighted noise and equalization:

in/s	Full Track 0.25″	Half Track 0.25″	Two Track 0.25″	Four Track 0.50″	Four Track 0.25″
30.00	72 dB	68 dB	68 dB	68 dB	65 dB
15.00	72 dB	68 dB	68 dB	68 dB	65 dB
7.50	72 dB	68 dB	68 dB	68 dB	65 dB
3.75	68 dB	64 dB	64 dB	64 dB	61 dB

Flutter and Wow

Weighted peak flutter (ANSI S4.3, 1972; IEC 386, 1972)

in/s	DC Servo	AC Motor
30.00	0.04%	—
15.00	0.04%	0.08%
7.50	0.05%	0.10%
3.75	0.10%	0.20%

Table 1-2. SPECIFICATIONS (Continued)

Distortion	500-Hz third harmonic using 3M206 Tape or equivalent; at peak record level (500 nWb/m), less than 3%; at standard operating level, less than 0.6%.
Head and Track Configuration	See Table 1-1.
Speed Accuracy	±0.1% with DC Servo; ±0.2% with AC motor throughout reel at all speeds, using 1.5 mil tape.
Standard Operating Level (Playback Fluxivity)	3.75 and 7.50 in/s: 200 nWb/m at 1000 Hz 7.5, 15 and 30 in/s: 250 nWb/m at 1000 Hz
Start and Stop Time	0.25-in tape: at 15 in/s reaches nominal speed, ±0.1%, in 200 ms with a full supply reel. From Play tape moves less than 1.5 inches (3.81 cm) after pressing STOP. At wind speed, tape stops in less than 5 seconds.
Wind Time	Less than 60 seconds for 2400-foot (730.5-meter) NAB type A reel, 0.25-inch tape
Reel Sizes	To 11.5-inches (28.2 cm) (CCIR)
Inputs	Floating Bridging: 10 Kilohms impedance; minimum level, 200 mV
Outputs	+24 dBm into 600 ohm Load (output impedance 60 ohms)
Power Requirements	105 to 125 or 220 to 240 Volts, 50/60 Hz. Power Consumption at 117 Vac: 60 Hz 223 VA for 1 & 2 Channel 328 VA for 4 Channel
Tape Widths	0.25 and 0.50-inch
Tape Speeds (Two)	3.75 in/s and 7.5 in/s, or 7.50 in/s, 15 in/s and 30 in/s with optional servo. Equalization switches automatically with speed.
Motors	Capstan: Direct drive hysteresis synchronous (Phase-lock servo optional). Reel: Induction torque motor (2)
Brakes	Dynamic plus disc
Alignment Controls	Equalization controls (2 Record, 4 Play), Bias Adjust, Record Cal., Sync Level, Play Cal., Bias Level Set

Table 1-2. SPECIFICATIONS (Continued)

Bias and Erase Frequency	160 kHz
Erase Efficiency	Greater than 75 dB at 1 kHz below 500 nWb/m
Remote Control	Duplicates transport controls, except that ATL defeat is provided by holding down either of the fast function buttons.

NOTE: Specifications subject to change without notice or obligation.

1.2 TAPE TRANSPORT

The tape transport handles 0.25-inch (6.35 mm) or 0.50-inch (12.70 mm) magnetic tape on reels up to 11.5 inches (28.2 cm). Tape control functions include tape take-up TENSION (reel-size) switch; Fast Forward and Fast Reverse, STOP, START, and Edit pushbuttons; and a CAPSTAN High/Low speed select switch. An automatic tape lifter (ATL) is provided to minimize tape and head wear during Fast Forward (FF) and Rewind (FR) modes. For fast cueing, a manual defeat of the ATL functions is also provided. The pushbuttons are lighted to indicate visually actual transport mode of operation.

1.3 ELECTRONIC ASSEMBLY

The electronic assembly contains: the record/playback control panel and amplifier assemblies; a regulator, bias oscillator, and amplifier printed wiring assembly (PWA); and a permanently mounted electronics motherboard assembly. An equalization PWA plugs into each record/playback amplifier PWA. Equalization is switched automatically when tape speed is selected. A RECORD READY switch on the record/playback control panel allows recording on any or all channels. Each record/playback control panel contains a vu meter that indicates playback or record levels. One record/playback control assembly is provided for each channel. One regulator, bias oscillator, and amplifier PWA provides dc voltages and bias signals for one or two channels. An additional bias Amplifier PWA is used for four-channel systems.

1.4 HEAD ASSEMBLY

The head assembly contains three head stacks: erase, record, and playback. Refer to Table 1-1.

1.5 OPTIONAL AND ACCESSORY EQUIPMENT

The following optional and accessory equipment is available for use with the 280B Series Recorders.

- Remote Control Unit, Figure 1-2: The table model has a 31-foot long cable with connector P111 installed. The panel mount configuation includes mating connectors and pin terminals for a cable of the desired length up to 50 feet.
- Capstan servo system option: Provides increased speed accuracy, less flutter and wow, and improved frequency response. The servo system is designed around a printed circuit motor. A crystal oscillator provides the basic tape speed reference frequency with an optical tachometer serving as the functional reference.
- Varisync Model VS-76: Varies tape speed from any of the preset speeds (3.75, 7.5, 15 or 30 in/s) by +50% to -25% and can lock the capstan motor speed to a pre-recorded control track. The Varisync accessory can

be fitted to all 280 B family of recorders equipped with a capstan servo option having the proper transport control logic printed wiring assembly.

- Monitor Speaker Accessory: The monitor speaker accessory is available for single-channel systems. It mounts in the electronics assembly and has its own volume control.

- Console Cabinets:

  One- and two-channel

  Four-channel

- Record/reproduce Equalizers, plug-in type, one required per channel:

  NAB 3.75 or 7.5 in/s

  NAB 7.5 or 15 in/s

  IEC 7.5 or 15 in/s

  DIN/IEC 3.75 or 7.5 in/s

  NAB AES 16 or 30 in/ (servo-equipped models)

  IEC AES 15 or 30 in/s (servo-equipped models)

  Special equalizations available.

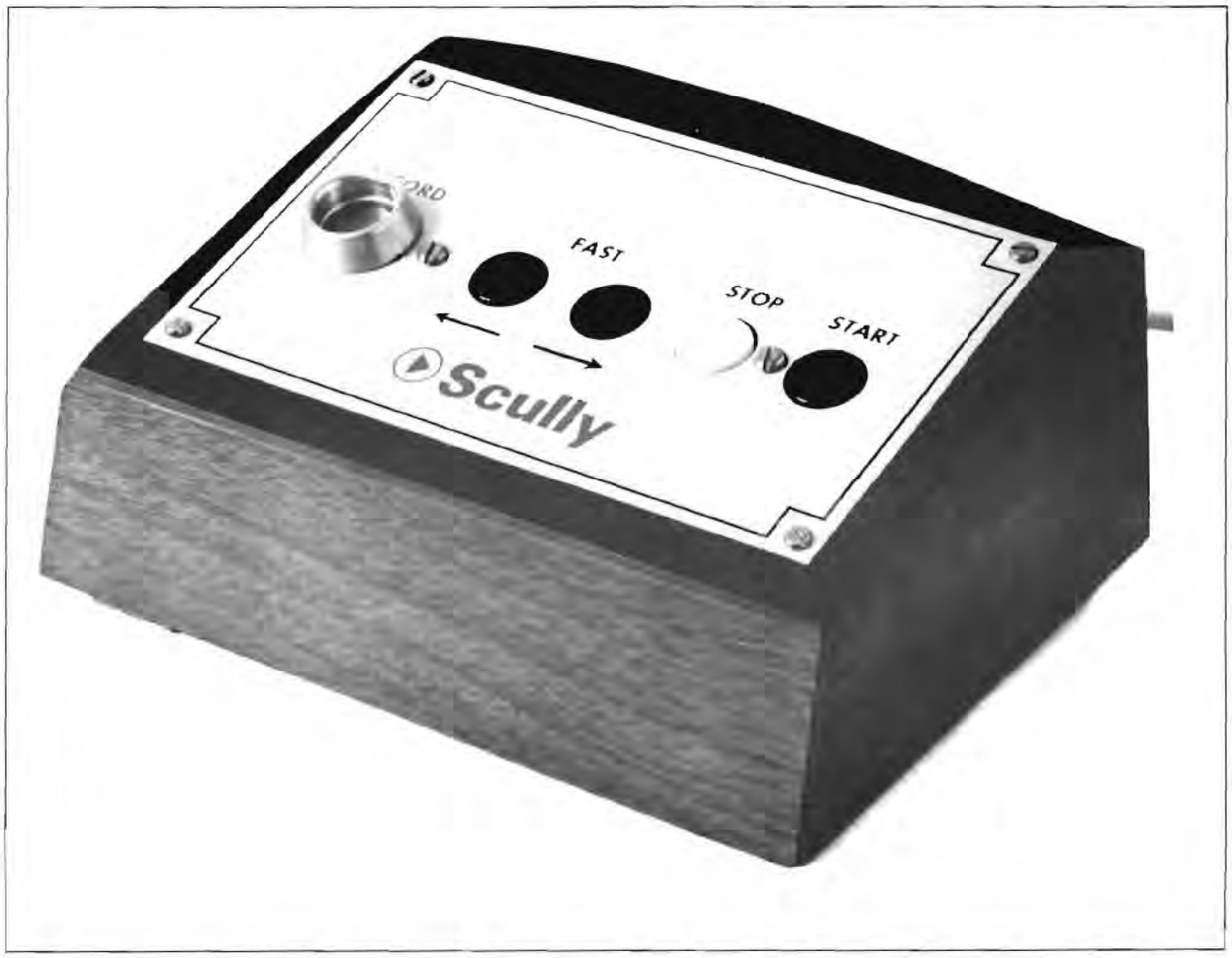

Figure 1-2. Remote Control Unit Accessory

SECTION 2
INSTALLATION

2.1 GENERAL

Scully 280B Series equipment is shipped in specially designed packaging and is fully protected from normal shipping shock and vibration. After unpacking, examine the equipment for possible damage before connecting ac power. Notify the carrier immediately if any damage is noted. Before throwing away the packing material, make sure that all invoiced items are present.

The tape transport and electronics assembly are regularly shipped in two cartons. The power cord (plug-in), mounting hardware, flywheel, and Allen wrenches are located in a hardware bag that is packed with the transport mechanism. A 10.5-inch take-up reel is also in the shipping carton.

The 280B is designed to fit in a standard 19-inch equipment rack, cabinet, or console. Figure 2-1 shows the mounting dimensions of the 280B.

2.2 UNPACKING

A. Lift the transport mechanism out of the carton using the two shipping straps provided for this purpose.

CAUTION

Do not lift by the motors or their shafts.

B. Remove the straps.

C. Remove the electronics assembly from the carton.

D. Position the large carton so that the arrow is point up.

E. Remove and assemble the console riser and electronics shelf.

F. Fasten this assembly to the top of the console with the bolts provided.

2.3 CONSOLE MOUNTING

A. Mount the transport into the cutout on the top surface. Tighten the mounting screws. Remove the capstan flywheel from the hardware bag and mount it on the capstan motor shaft.

B. Mount the electronics assembly in the electronics cabinet above the transport. In systems which have two electronics assemblies, mount the channels 1 and 2 assembly in the top rack position.

C. If the electronics drawer has been disconnected from the rail slides, carefully reinstall the drawer as follows:

1. Pull the left- and right-hand slides out of the housing as far as they will go.
2. Position the electronics drawer so that the drawer rails rest on top of the slides.
3. Gently push the drawer all the way in until the drawer rail catches drop into cutouts in the slides.
4. Pull the electronics drawer out to the service position and check that both drawer rail catches drop into place.

2.4 RACK MOUNTING

A. Mount the transport in the equipment rack using the panel mounting hardware supplied. The recommended rack placement is for the electronics assembly to be mounted directly below the tape transport, or within the limit of the connecting cables. Remove the flywheel from the hardware bag and mount it on the capstan motor shaft.

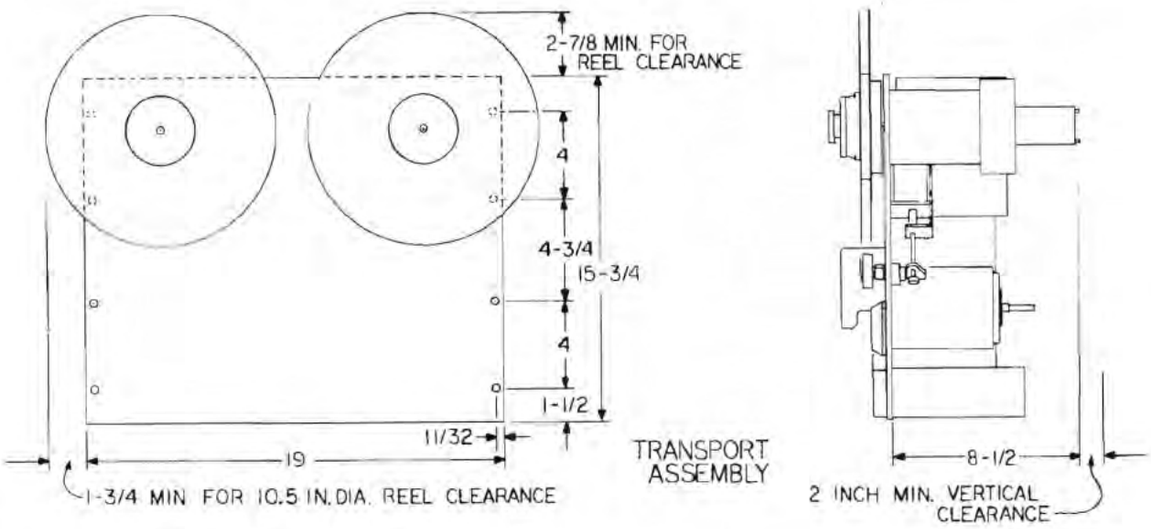

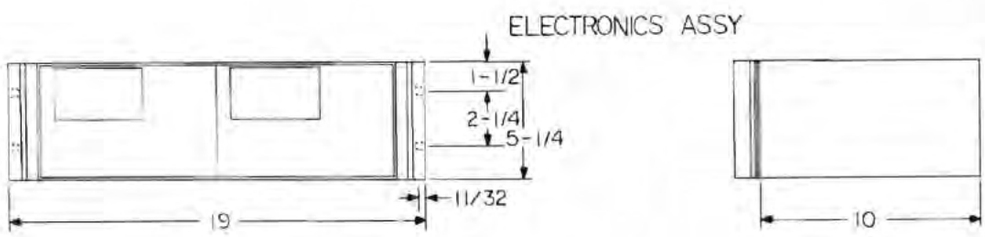

CONVERSION TABLE FOR 280B MOUNTING DIMENSIONS

INCHES	METRIC EQUIVALENT	INCHES	METRIC EQUIVALENT
11/32	8.73 mm	4-3/4	12.07 cm
1-1/2	3.81 cm	5-1/4	13.34 cm
1-3/4	4.45 cm	8-1/2	21.59 cm
2	5.08 cm	10	25.40 cm
2-1/4	5.72 cm	15-3/4	38.10 cm
2-7/8	7.30 cm	19	48.26 cm
4	10.16 cm		

Figure 2-1. Mounting Dimensions

B. Mount the electronics assembly in the rack below the tape transport using the mounting hardware supplied. In units which have two electronics assemblies, mount them below the transport with the channels 1 and 2 assembly above the channels 3 and 4 assembly. In a four-amplifier system, the regulator, bias oscillator, and amplifier PWA is mounted in the channels 1 and 2 assembly. The bias amplifier PWA is mounted in the channels 3 and 4 assembly.

NOTE

The tape transport will not operate unless it is connected to the electronics assembly.

2.5 CABLING INTERCONNECTIONS

Interconnect the tape transport and the electronics assemblies as shown in Figure 2-2, and detailed below:

A. Connect cable W1 from the head bridge sockets J112, J113, and J114 to head input socket J125 on the rear of the electronics assembly. Connect the cable connector marked P125A to J125A on the upper electronics assembly, and the connector marked P125B to J125B on the second electronics assembly, etc.

B. Connect cable W2 between electronics power connector J109 on the transport control assembly and the power input connector J126 on the upper electronics assembly.

C. If two or more electronics assemblies are used, connect cable W3 between the J123 power transfer connector on all electronics assemblies.

D. If the remote control assembly is used, connect its cable to remote socket J111 on the transport control chassis assembly.

E. Connect cable W4 between ac power plug J201 on the power supply and a 115-120 volt, 50/60 Hz power source. If the recorder is operated at a different line voltage, the jumper plug on the power transformer input winding, Figure 2-3 and Table 2-1, should be changed for optimum performance. Assure proper system grounding and completely check all cables before applying power.

F. A female XLR type audio connector is required to connect the output of each amplifier. These connectors are plugged into LINE OUT receptacles J120 and J118 provided on the rear of the electronics assembly.

G. A male XLR type audio connector is required to connect the input to the amplifier. These connectors are plugged into LINE IN receptacles J119 and J117 located on the rear of the electronics assembly.

CAUTION

Check that the switch (Figure 7-7), located on the power supply, is in the correct position for the tape width being used.

H. Check that dummy plug P110 is installed in inverter socket J110 on the transport assembly.

Table 2-1. Power Supply Jumper

VOLTAGE (Vac)	CONNECTION
240	P1 to E8
220	P1 to E10
125	P1 to E12
105	P1 to E14
115	P1 to E23

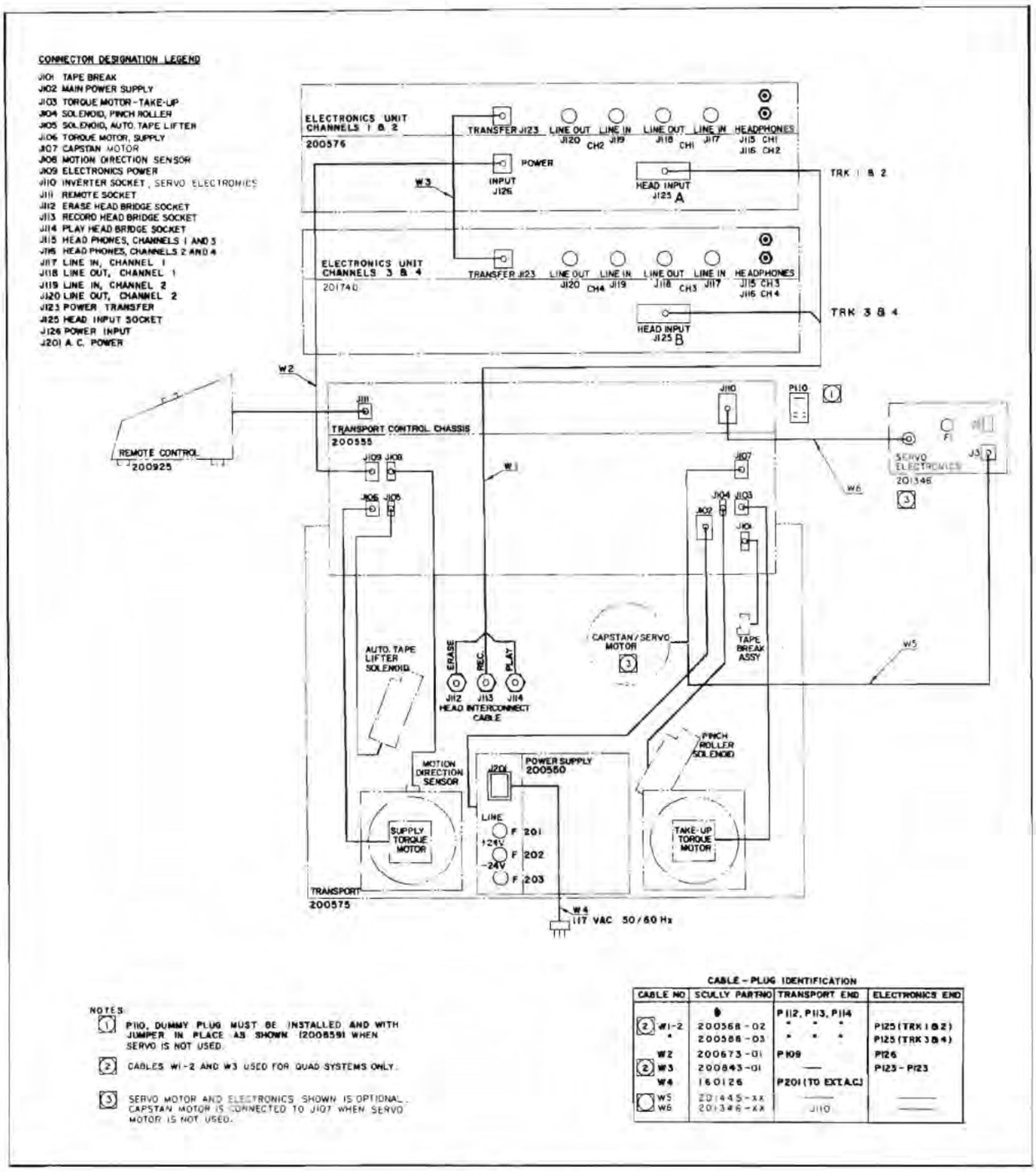

NOTES:

1. P110, DUMMY PLUG MUST BE INSTALLED AND WITH JUMPER IN PLACE AS SHOWN (200859) WHEN SERVO IS NOT USED.
2. CABLES W1-2 AND W3 USED FOR QUAD SYSTEMS ONLY.
3. SERVO MOTOR AND ELECTRONICS SHOWN IS OPTIONAL. CAPSTAN MOTOR IS CONNECTED TO J107 WHEN SERVO MOTOR IS NOT USED.

CABLE - PLUG IDENTIFICATION

CABLE NO	SCULLY PART NO	TRANSPORT END	ELECTRONICS END
		P112, P113, P114	
(2) W1-2	200568-02	* * *	P125 (TRK 1 & 2)
*	200588-03	* * *	P125 (TRK 3 & 4)
W2	200673-01	P109	P126
(2) W3	200843-01	—	P123 - P123
W4	160126	P201 (TO EXT. A.C.)	
(3) W5	201445-XX	—	—
W6	201346-XX	J110	—

Figure 2-2. Interconnection Diagram

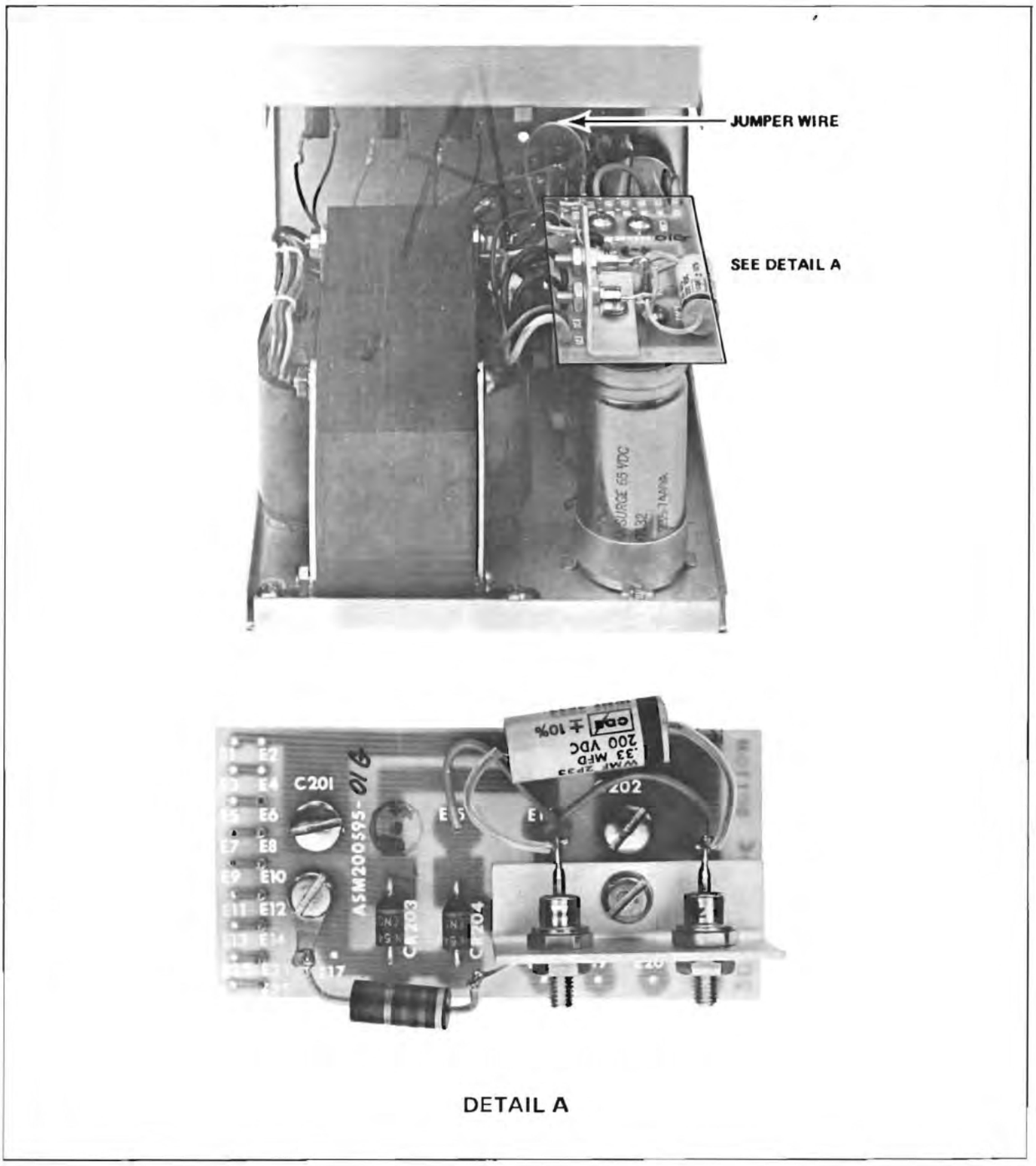

Figure 2-3. Power Supply Jumper

SECTION 3
OPERATION

3.1 GENERAL

Operating controls for the 280B Series tape transports are located on the front panel assembly of the tape transport mechanism. Operating controls for the amplifiers are located on the record playback control panel. The transport pushbuttons contain lamps to indicate the mode of operation of the transport.

The control and indicators are illustrated in Figure 3-1.

3.2 TAPE THREADING

Before installing and threading the tape, make sure that routine procedures for tape path maintenance have been followed according to the recommended practice outlined in section 4. Figure 3-2 shows the tape threading path. Set the TENSION control to HI for large reels and LO for small reels.

3.3 SELECTING SPEED AND APPLYING POWER

A. Turn the POWER switch to on. The STOP pushbutton and the vu meter lamps light to indicate that power is on.

B. Select the desired capstan speed (CAPSTAN HIGH/LOW switch). The CAPSTAN switch automatically changes electronic equalization.

CAUTION

Do not change tape speed while in the Play mode. Damage to the machine may result.

3.4 PLAYBACK MODE

A. Thread the recorded tape on the transport.

B. Set the Monitor switch to PLAYBACK.

C. Set the Function switch to SAFE.

D. Press the START pushbutton.

3.5 STOPPING THE UNIT

Press the STOP pushbutton to halt tape motion from any mode. The 280B automatically stops if the tape breaks or end-of-tape is reached. This is provided for by the tape-break arm, located on the right side of the tape transport.

3.6 RECORD MODE

A. Thread the transport with a blank tape or a tape previously recorded with program material no longer required.

NOTE

If the previously recorded tape was recorded with a different head configuration, best results are obtained by bulk erasing the tape before recording.

B. Set the Monitor switch to RECORD.

C. Adjust record level with the RECORD LEVEL control.

D. Set the Function switch to RECORD READY for those channels to be used for recording.

E. Press the START pushbutton to start tape motion.

F. Press the RECORD pushbutton. The indicator lamp in the RECORD pushbutton lights (red), but RECORD READY must also be selected before the RECORD indicator on the amplifier lights and the transport enters the RECORD mode.

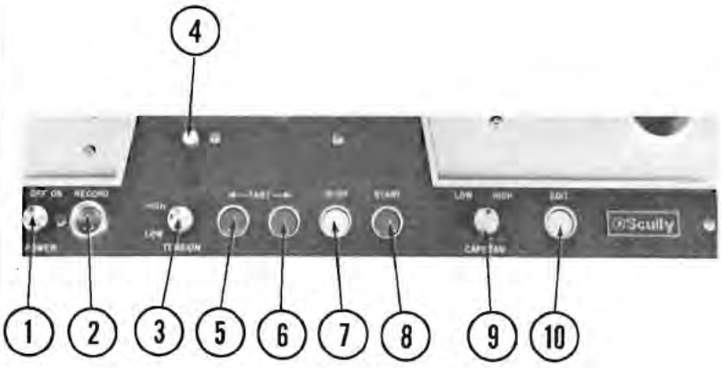

TRANSPORT CONTROLS

1 POWER OFF/ON
2 RECORD (RED)
3 TENSION
4 ATL DEFEAT LEVER
5 FAST REVERSE (BLUE)
6 FAST FORWARD (BLUE)
7 STOP (WHITE)
8 START (GREEN)
9 CAPSTAN LOW/HIGH
10 EDIT (YELLOW)

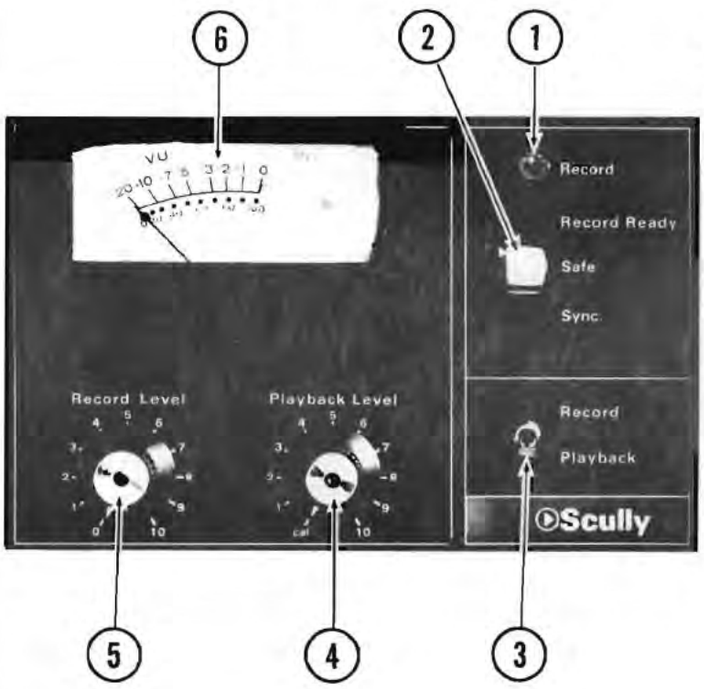

RECORD/PLAYBACK CONTROL PANEL

1 RECORD INDICATOR LAMP
2 FUNCTION SELECTOR SWITCH
RECORD READY (RED)
SAFE (GREEN)
SYNC (ORANGE)
3 RECORD/PLAYBACK MONITOR
MONITOR SWITCH
4 PLAYBACK LEVEL
5 RECORD LEVEL
6 VU METER

Figure 3-1. Controls and Indicators

G. The record signal at the output of the record amplifier, or the recorded signal at the output of the playback head, may be monitored while the recording is being made. (Monitor switch in RECORD or PLAYBACK position).

H. To change the channels which are recording, move the desired channel Function Selector Switch to RECORD READY.

3.7 SYNC MODE (Multi-channel Units only)

While recording on one channel, playback of another previously recorded channel may be obtained from the recording head stack. This is accomplished by setting the Function switch on the appropriate record/playback control panel to the SYNC position.

3.8 EDIT MODE

The Edit mode can only be entered from (or disabled by) the Stop mode. To edit the tape:

A. Set the Function switch to SAFE and the Monitor switch to PLAYBACK.

B. With the transport in the Stop mode, press the EDIT pushbutton. This spills and plays back the tape until the STOP pushbutton is pressed.

CAUTION

Hold the loose tape away from the capstan.

C. Press the STOP pushbutton when the edit point is reached.

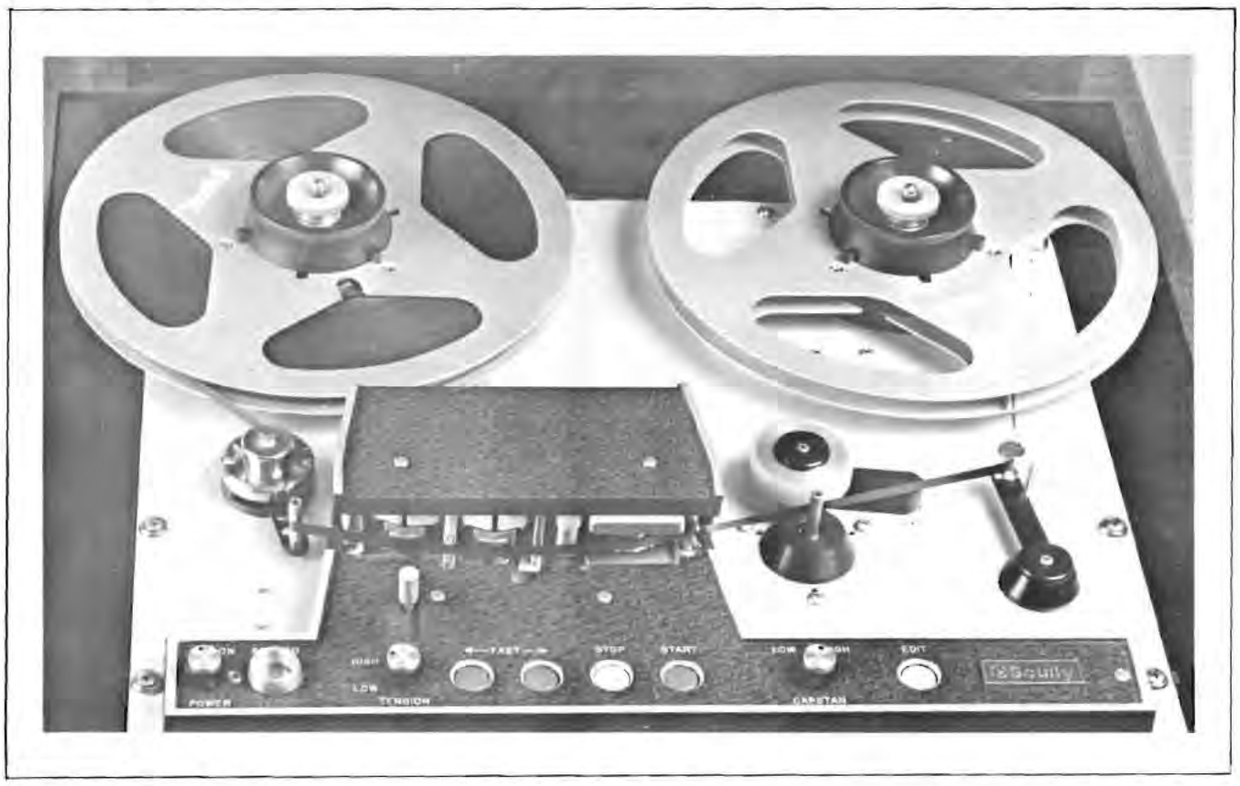

Figure 3-2. Tape Threading Path

SECTION 4
PREVENTIVE MAINTENANCE

4.1 GENERAL

Preventive maintenance of the electronics assembly consists of cleaning and visual inspection of components and wiring. Remove the covers at frequent intervals and remove any accumulations of dirt, dust, and foreign objects. Inspect for loose connectors, broken contacts, frayed or broken wiring, overheated components, or other visible signs of trouble. Check that printed wiring assemblies are firmly seated in their connectors.

4.2 CLEANING

Clean all components in the tape path after each reel change.

A. Remove all tape from the tape path.

B. Moisten a "Q" tip applicator with isopropyl alcohol. Squeeze excess solvent from the tip between two layers of clean cloth.

C. Scrub all components in the tape path, with exception of the pressure roller, commencing with the heads, using moderate pressure until all oxide particles are removed.

CAUTION

Do not use too much head cleaner, and never use a metallic instrument as a cleaning tool. Excess solvent dripping into critical parts or minor scratches on components in the tape path may seriously degrade the performance of the equipment. Do not use a blower of any type because dirt and dust particles may be forced into rotating parts.

D. Use a rubber band to hold the tape break arm and manually move the reels. Moisten a "Q" tip with isopropyl alcohol and squeeze out excess fluid. Contact the pressure roller with the "Q" tip and sweep the tip up and down the surface until all oxide is removed from the pressure roller. Change the applicator as soon as it becomes fouled.

E. Check all parts in the tape path for loose cotton fibers and unevaporated solvent. Remove and dry as necessary.

F. Inspect all components at the back of the transport once a month. Remove any accumulation of dirt or dust with a soft brush or vacuum cleaner.

4.3 LUBRICATION

No lubrication is required in the transport under regular maintanance conditions.

4.4 DEMAGNETIZING

The entire process of professional tape recording and reproducing relies on the use of alternating magnetic fields, but permanent dc fields are detrimental in many ways to high performance equipment. Such permanent magnetic fields cause amplitude and frequency distortion, as well as higher noise level and gradual degradation of recorded information. Therefore, good practice requires that the heads be demagnetized every month, or sooner if symptoms appear to indicate the need.

Any standard demagnetizer with padded tips can be used, but extreme care should be given to actual technique:

CAUTION

Remove all tape from the transport or in proximity to it; recorded information can be lost or distorted if a tape is even remotely exposed to the strong ac field of the demagnetizer. Never disconnect the heads while the power is on; otherwise, power surges and residual magnetic fields may form in the head circuitry.

A. With power to the recorder switched off, turn on the demagnetizer and put its tips against the poles (straddling the head gaps) in the center of the head.

B. Slowly rub the padded tips up and down against the face of the head a few times.

C. Slowly travel to the next head and repeat this demagnetizing procedure until each head has been demagnetized.

D. Very slowly pull the demagnetizer away from the transport until the tool is at least two feet away from the head assembly area, then turn off the demagnetizer.

SECTION 5
FUNCTIONAL CHECKS AND ADJUSTMENTS

5.1 GENERAL

5.2 Functional Check

The following is an abbreviated operator test of the Model 280B. If the machine fails to perform properly on any of the checks, refer to Section 7 for more detailed test procedures to be performed by a qualified service engineer.

A. Turn power on and check that the STOP pushbutton and vu meter lamps are lighted.

B. Load a reel of tape of the type normally used on the equipment. As the tape break arm moves into a vertical position, check that the capstan starts to rotate.

C. Press the START pushbutton. Check that the tape moves in a forward direction and that the START lamp lights.

D. Press the STOP pushbutton and check that tape motion stops and the STOP lamp lights.

E. Press the FAST → pushbutton and check that the FAST → lamp lights and the tape moves forward in a fast wind.

F. Press the ← FAST pushbutton. Check that the ← FAST lamp lights and the tape moves in a fast rewind.

G. Press the STOP pushbutton.

H. Input a signal (such as 1000 Hz) to the machine. Set the MONITOR switch to RECORD and adjust the RECORD LEVEL control for the desired level on the vu meter. Set the FUNCTION SELECTOR switch to RECORD and set the MONITOR switch to PLAYBACK. Press the START and then the RECORD pushbuttons. Check that the START and RECORD lamps light. Monitor the recorded signal on the vu meter and external amplifier speakers and check that playback is satisfactory. Repeat for each channel.

I. For multichannel units only, rewind to the beginning of the recorded signal, set the FUNCTION SELECTOR switch to SYNC, press the START pushbutton and observe playback on the vu meter. Check that SYNC is satisfactory. Repeat for each channel.

SECTION 6
THEORY OF OPERATION

6.1 ELECTRONICS ASSEMBLY

The electronics assembly consists of the heads on the tape deck, the motherboard PWA, the regulator, bias oscillator and amplifier PWA, the record/playback amplifier PWA, and the control panel assembly. The regulator, bias oscillator and amplifier PWA supplies regulated voltages and the 160 kHz bias signal to the channels 1 and 2 record/playback amplifiers. One record/playback amplifier PWA is required for each channel. A separate bias amplifier PWA is required for each pair of channels above two. An additional power supply provides operating voltages to the tape transport. Figure 6-1 shows the main stages in the system for a single channel.

6.2 RECORD MODE

When the transport is in the Start mode and the RECORD pushbutton is pressed, a Record Enable and a Record Light signal are made available at the Function Selector switch. When the RECORD READY position is selected by the Function Selector switch, the Record circuit is completed and the following occurs: The RECORD light on the record/playback control panel lights; record relay K2 energizes, and the bias and erase voltages are progressively switched to the appropriate heads.

6.3 PLAY MODE

When the transport is in the Play mode, the Function Selector switch is normally in the SAFE position and the Monitor switch is in the PLAYBACK position. The signal from the playback head is controlled by the PLAYBACK LEVEL control.

6.4 SYNC MODE

When the transport START pushbutton has been pressed and the Function Selector switch is in the SYNC position, the sync relay on the motherboard is energized to permit switching of the record head for the selected channel(s) to the playback monitoring mode while recording on other channels. This feature allows the operator to synchronize recording with previously recorded material on the selected channel(s).

6.5 SQUELCH CIRCUIT

The squelch PWA suppresses transients from the audio circuits.

6.6 TAPE TRANSPORT ASSEMBLY

The tape transport assembly consists of two torque motors, a two-speed ac capstan drive motor, constant tension components, and a power supply. (See Figure 6-2).

6.7 CONSTANT TENSION

The tension sensor PWA, mounted on the bottom of the dancer arm assembly, consists of an opto coupler and an optical grating which control the amount of light which reaches the transistor. The optical grating is mechanically connected to the tension dancer arm. As the tension dancer arm moves in response to changes in tape tension, the tension sensor PWA transmits signals to the constant tension control unit in the transport power supply which initiates changes in the holdback voltage applied to the supply reel.

6.8 TRANSPORT LOGIC

The tape transport control and power circuits are contained in the transport control chassis. This assembly contains the switches, relays, and logic which control the tape transport in all modes. All ac high-voltage wiring is run within the insulated wiring, connectors, or covered relays to provide protection to personnel. Table 6-1 shows the state of the motor relays, takeup and supply brake solenoids, pinch roller solenoid, ATL solenoid and logic for all modes of operation.

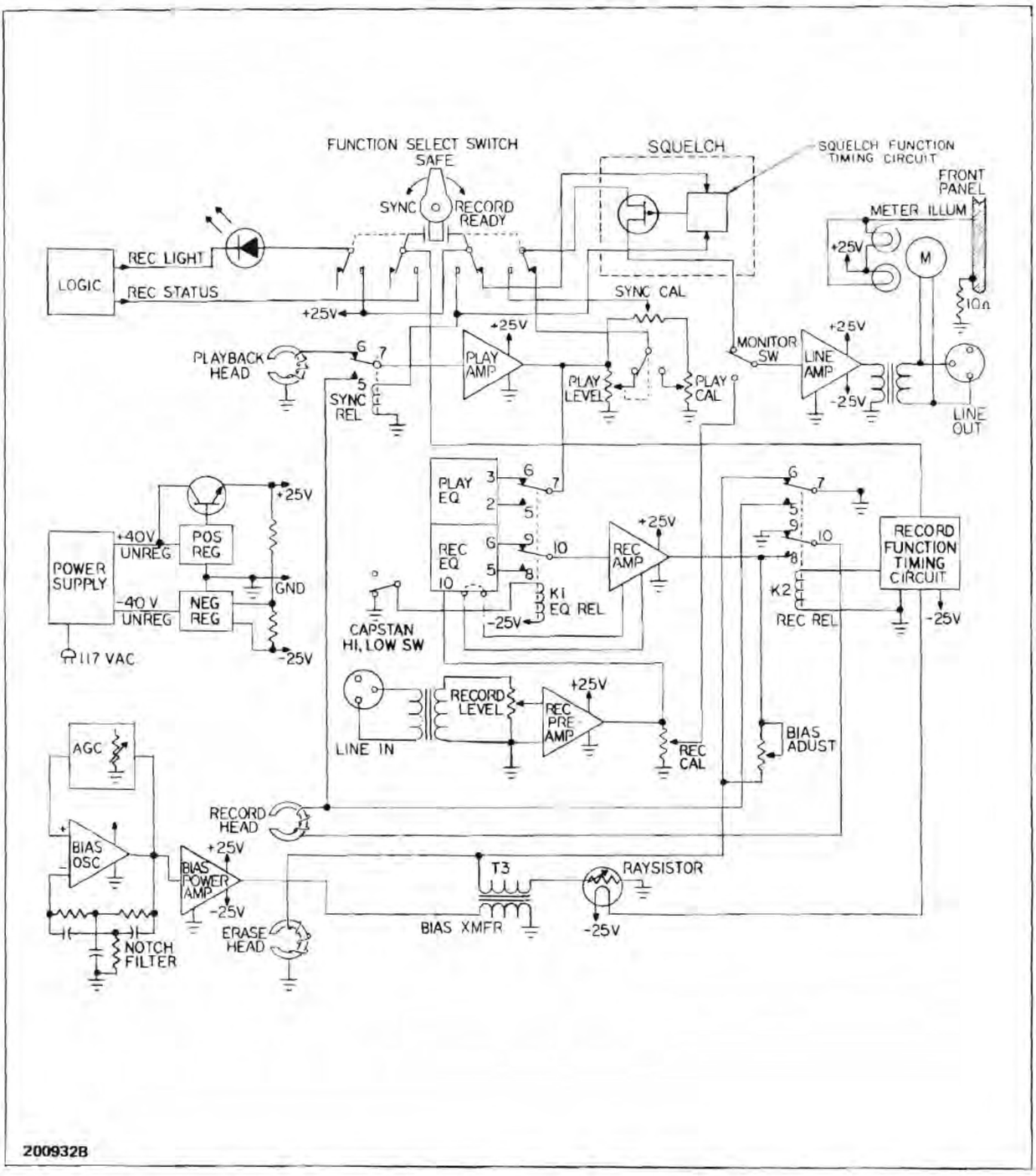

Figure 6-1. System Block Diagram

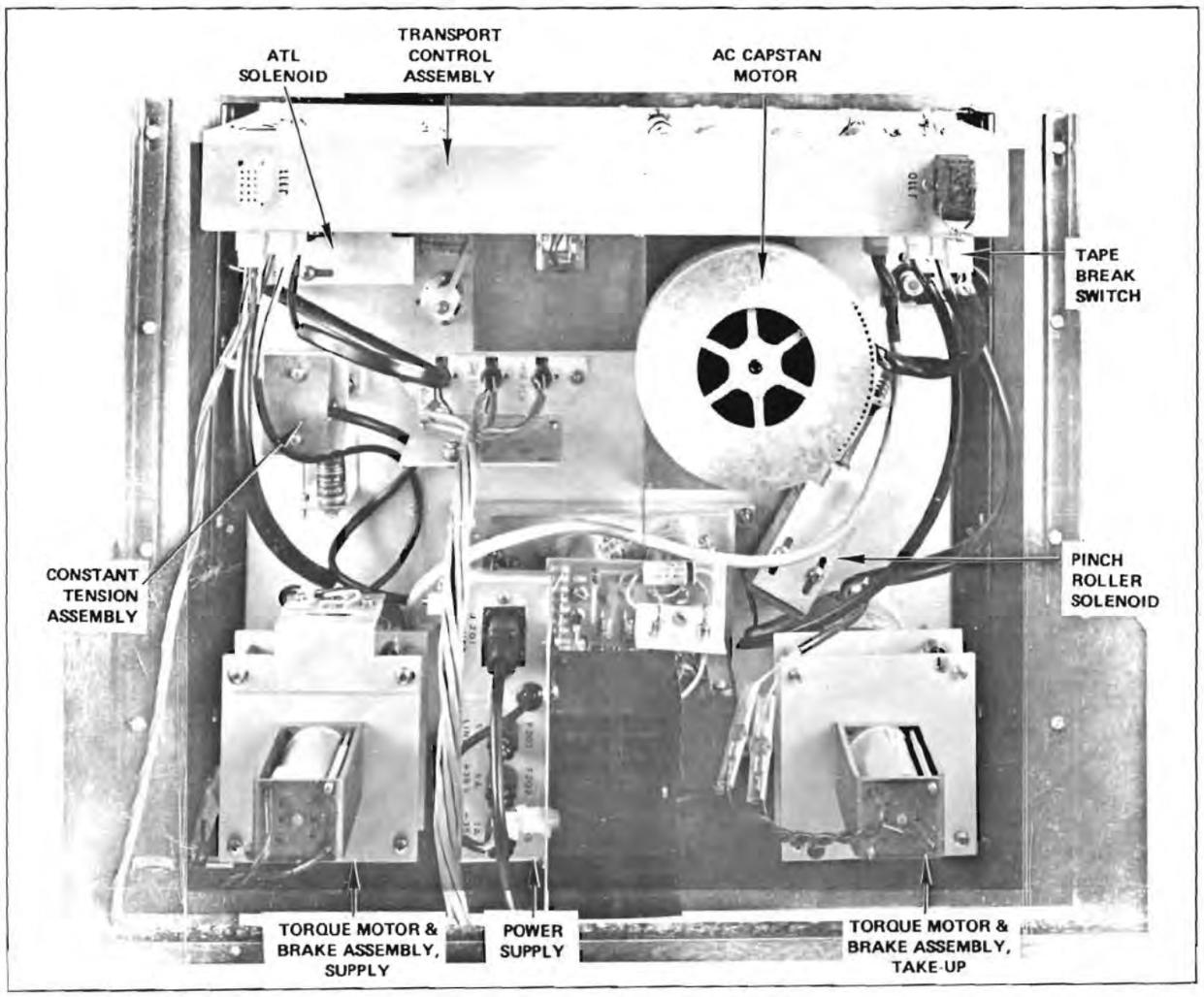

Figure 6-2. Transport, Bottom View

Table 6-1. Transport Logic Operation

MODE	GATE/PIN LEVEL																							MOTOR RELAYS			STATE OF COLLECTOR AT TRANSISTOR:									
																								K1	K2	K3	Q7	Q2	Q13	Q14	Q15	Q16	Q12	Q6	Q8	Q3
STOP	U1-5 0	U1-6 1	U2-8 1	U4-3 1	U5-14 1	U5-13 0	U2-6 0	U2-3 0	U4-8 0	U4-11 0	U3-6 0	U6-6 0	U6-8 0	U11-6 0	U12-10 1	U12-4 1	U7-2 0	U5-7 0	U5-4 0	U5-9 0	U8-3 1	U10-6 1		OFF	OFF	OFF	OFF	OFF	OFF	OFF	OFF	OFF	ON	OFF	OFF	OFF
WIND	U7-5	U7-6	U8-6	U9-6	U5-7 1	U4-8 1	U3-6 1	U6-8 1	U9-8 1	U5-4 0	U6-3 1	U6-6 1	U6-11 1	U10-10 0	U7-10 0	U4-3 1	U5-13 0	U4-5 1	U9-8 1	U5-4 0	U7-2 1			ON	ON	OFF	OFF	OFF	ON	OFF	OFF	OFF	OFF	ON	ON	ON
REWIND	U7-13	U7-12	U4-6	U9-8	U5-4 1	U4-11 1	U3-6 1	U6-8 1	U6-11 1	U7-11 1	U7-10 0	U4-3 1	U5-13 0	U9-3 1	U9-6 1	U5-7 0	U7-2 1							OFF	ON	OFF	OFF	OFF	OFF	OFF	OFF	OFF	ON	OFF	ON	ON	ON
PLAY	U1-13 *	U1-12 *	U9-11 *	U5-9 1	U12-11 1	U11-5 1	U11-6	U6-6	U6-8	U6-11 1	U10-10 0	U12-4 0	U7-2 1											ON	ON	ON	OFF	ON	OFF	ON	OFF	OFF	OFF	OFF	ON	ON	OFF
RECORD FROM PLAY				U5-9 1	U12-11 1	U11-5 1				U6-11 1	U10-10 0	U12-4 0	U7-2 1	U3-10 0	U3-8 0	U10-2	U10-4 1							OFF	OFF	ON	ON	ON	OFF	ON	OFF	OFF	OFF	OFF	ON	ON	OFF
TAPE-BREAK	U7-3 0	U7-4 1	U7-9 0	U8-3 0	U8-6 0	U8-8 0	U8-12 0	U5-9 0	U5-7 0	U5-4 0														ON	OFF	OFF	OFF	OFF	OFF	OFF	OFF	OFF	OFF	OFF	ON	ON	OFF
EDIT	U10-9	U10-10 1	U12-11 0	U12-13 1	U12-1 0	U12-4 0	U7-2 1	U12-5 0	U3-3 1	U9-6 1	U9-8 1													OFF	OFF	OFF	OFF	ON	OFF	OFF	ON	OFF	OFF	ON	ON	OFF
WIND TO STOP	U5-7 0	U5-4 0	U5-13 1	U1-8 0	U5-5 0	U5-1 0	U2-6 1	U2-3 0	U4-11 1	U3-6 1	U6-8 1	U6-11 1	U10-10 0	U12-10 0	U12-4 0	U7-2 1								OFF	ON	OFF	OFF	OFF	OFF	OFF	OFF	ON	OFF	ON	ON	ON
REWIND TO STOP	U5-4 0	U5-7 0	U5-13 1	U1-8 0	U5-5 0	U5-1 0	U2-6 0	U2-3 1	U4-8 1	U3-6 1	U6-8 1	U6-3 1	U6-11 1	U10-10 0	U12-10 0	U12-4 0	U7-2 1							OFF	ON	OFF	OFF	OFF	ON	OFF	OFF	OFF	OFF	ON	ON	ON
WIND TO PLAY	U5-7 0	U5-4 0	U1-13 *	U1-12 *	U9-11 *	U5-9 1	U7-11 1	U7-10 0	U2-8 *	U4-3 *	U5-13 1	U1-8 0	U8-8 0	U8-12 0	U2-6 1	U2-3 0	U4-11 1	U3-6 1	U6-8 1	U6-11 1	U10-10 0			OFF	ON	OFF	OFF	OFF	OFF	OFF	OFF	ON	OFF	ON	ON	ON
REWIND TO PLAY	U5-7 0	U5-4 0	U1-13 *	U1-12 *	U9-11 *	U5-9 1	U7-11 1	U7-10 0	U2-8 *	U4-3 *	U5-13 1	U1-8 0	U8-8 0	U8-12 0	U2-6 0	U2-3 1	U4-8 1	U6-3 1	U6-6 1	U3-6 1	U6-8 1	U6-11 1	U10-10 0	ON	ON	OFF	OFF	OFF	ON	OFF	OFF	ON	OFF	ON	ON	ON

*Pulse visible only with oscilloscope.

SECTION 7
MAINTENANCE

7.1 MECHANICAL ADJUSTMENT

7.2 BRAKE ADJUSTMENT

A. Loosen both brake disc setscrews. Set the distance between the torque motor plate and the disc hub using brake disc gage part no. 400519. Tighten the setscrews.

B. Adjust the brake spring tension equally on the supply torque motor assembly by loosening the lock nuts (see Figure 7-1) and turning both brake adjustment acorn nuts equal amounts, so that the friction holdback torque is as shown shown in Figure 7-2.

C. Repeat steps A and B for the take-up torque motor so that the friction is as shown in Figure 7-2. Measurements should be taken at a constant rotational speed just above breakaway condition. Torque can be measured using a suitable spring scale to give the reading noted on breakaway. The brakes should be exercised and the torque checked in the direction shown.

D. Tighten the lock nuts.

E. Load a 10.5-inch reel of tape on the transport. Set the controls for the fastest tape speed and operate the machine in the Play mode. Press the STOP pushbutton. If the brakes are adjusted properly, tape motion will stop smoothly with the tape properly packed on the reels.

7.3 Tape Head Assembly Adjustments (Figure 7-3).

The tape head assembly is completely aligned at the factory. No changes are necessary except for the azimuth alignment, which should be checked periodically to assure continued peak performance. Replacement head assemblies are supplied completely assembled and prealigned. After installation, only a mounting and rotation check is required.

A. Azimuth is adjusted by means of roundhead screws (5) that pass through access holes in the head bridge mounting plate (3) on either side of the center fastening screw (7). The left-hand screw has a spring which floats the left side of the head assembly. Only the right-hand screw is used to adjust the azimuth.

B. Zenith is adjusted by means of two Allen setscrews (4) that pass through access holes in the head bridge mounting plate (3) on either side of the center fastening screw and 90 degrees from the azimuth adjustment screws (7). Initially, when installing a magnetic head, the setscrews (4) are released so that the base of the head can be brought up solidly against the head mounting block by tightening the right-hand azimuth screw (5). Turn the zenith setscrews (4) until they make contact with the head base. From this point, turn each zenith setscrew one half turn, then release the right-hand azimuth screw an equal amount to prevent head distortion and damage. Repeat this procedure a half turn at a time until proper head height is reached. Visually check head-to-tape alignment to determine proper head height.

C. Tangency of each head gap to the tape is adjusted by loosening the 10-32 socket head cap screw (7) above the center of the head stack and rotating the stack. Adjust the playback head for maximum signal on the vu meter while reproducing a high frequency signal from a standard tape. After the playback head has been adjusted, adjust the record head while recording a high frequency signal and observing the output on the playback head. Adjust the erase head for a maximum efficiency in erasing previously recorded information.

D. Position the scrape filter (10) for the lightest tape contact at which it can follow the tape speed. Although difficult to measure, wrap of

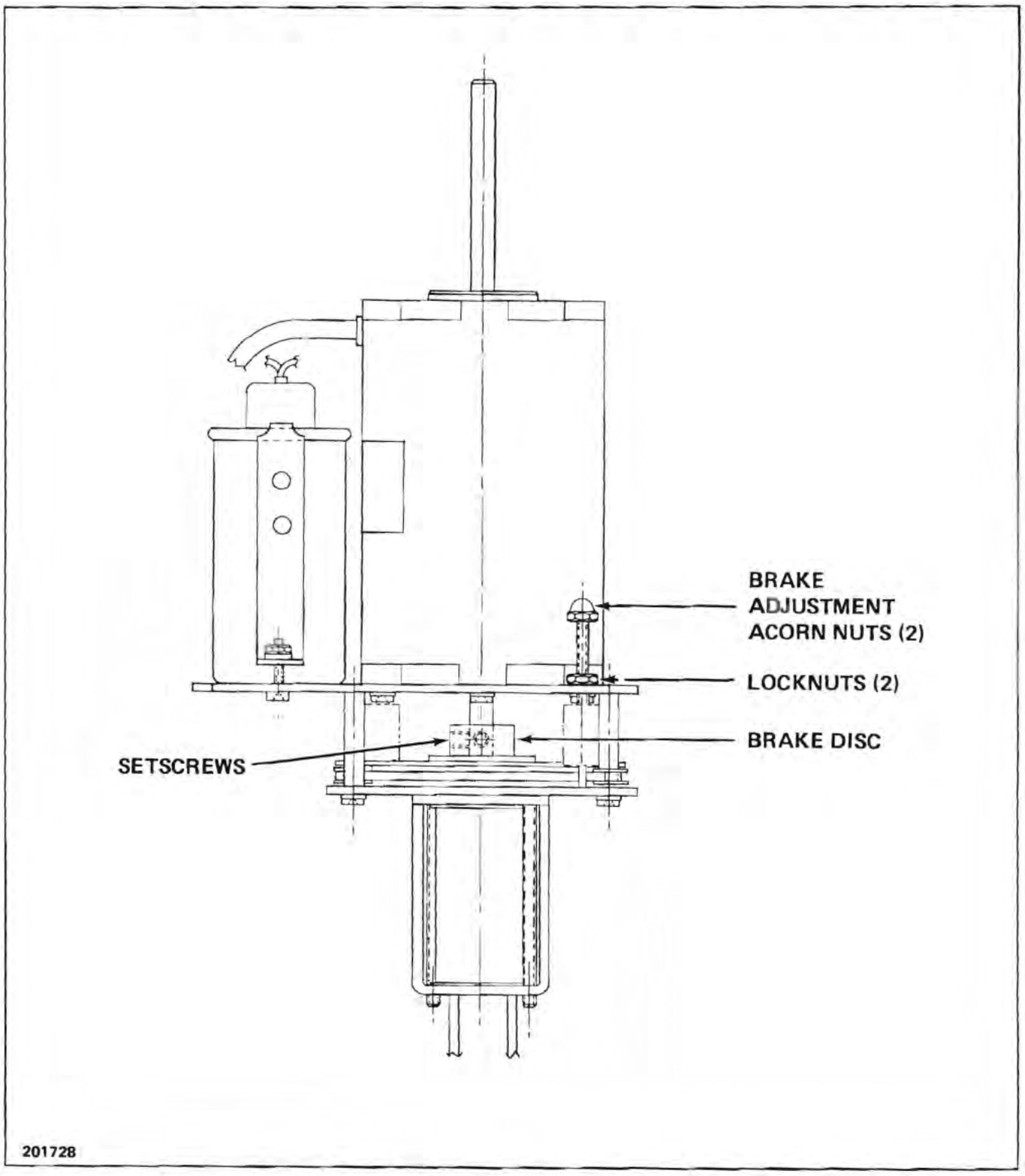

Figure 7-1. Brake Adjustments

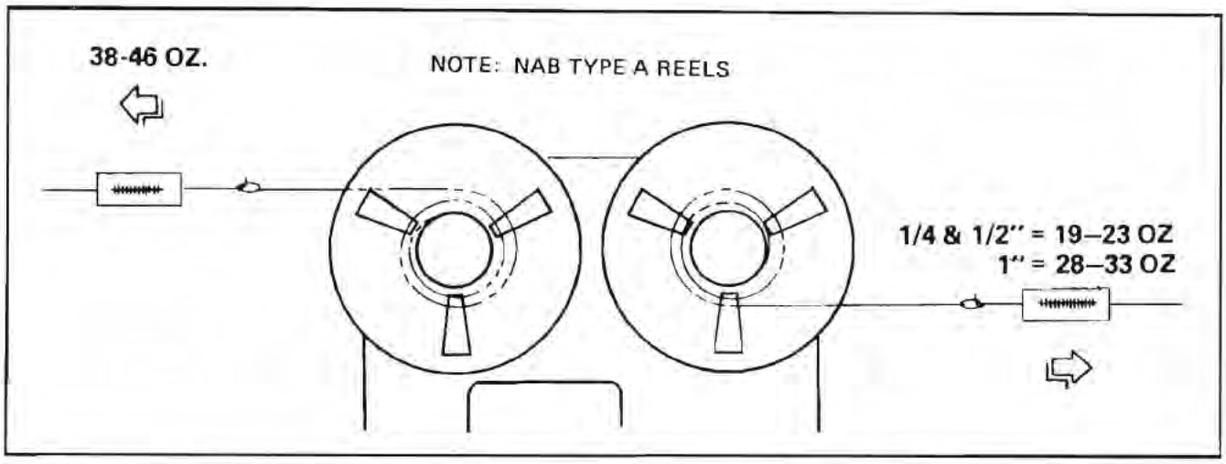

Figure 7-2. Suggested Method of Adjusting Brake Torque

1 to 1.5 degrees is ideal. Adjust the scrape filter by loosening the rotation adjustment screw (6) and carefully positioning the filter for correct tape contact.

E. The erase, record, and playback head assemblies can be removed from the head bridge mounting plate (3) by unscrewing the 10-32 socket-head cap screws (7) and unplugging the head connectors. The individual stacks can be removed from their respective mounting blocks by loosening the 6-32 azimuth screws (5). The entire head/bridge assembly can be removed for inspection by unplugging the head cables and removing the three 8-32 flathead screws (2) that hold the head bridge mounting plate. No realignment is required upon reinstallation when neither the azimuth nor zenith adjustment has been changed.

7.4 Motion-Direction Sense Adjustment (Fig. 7-4)

A. Loosen two screws (14) and adjust motion direction sensor PWA so that motion direction sensor arm assembly (9) is centered in the slot of the photon coupler on the PWA.

B. Connect a voltmeter, using the 0 to 5 Vdc minimum range, between ground a U1-1 on the transport logic PWA (Figure 8-32). Loosen two screws (18) on motion direction sensor bracket (4). Hold reel knob on supply motor and rotate it back and forth slightly. Position the motion direction sensor bracket until the voltage switches from 0 to 3.5V minimum in the forward direction and from 3.5V minimum to 0V in the rewind direction (0V = Logic 0, 3.5V = Logic 1). When the motion direction sensor bracket is correctly adjusted, the reel knob will move equal amounts in each direction before the voltmeter needle starts to move.

7.5 Tension Posts (Figure 7-5)

To adjust the tension post spring on the tape break arm, loosen the setscrew (2) on the spring adjustment collar (1) and rotate the collar to increase or decrease tension.

NOTE

The tape break arm has two adjustment collars. Be sure to loosen the setscrew in the round collar (1), not the one in the collar with the flat (4).

This adjustment can be made from the underside of the transport, and is normally optimized for best tape handling. The tape break arm should be set to operate the microswitch (3) approximately 0.125 to 0.25 inch (3.18 to 6.35 mm) before the

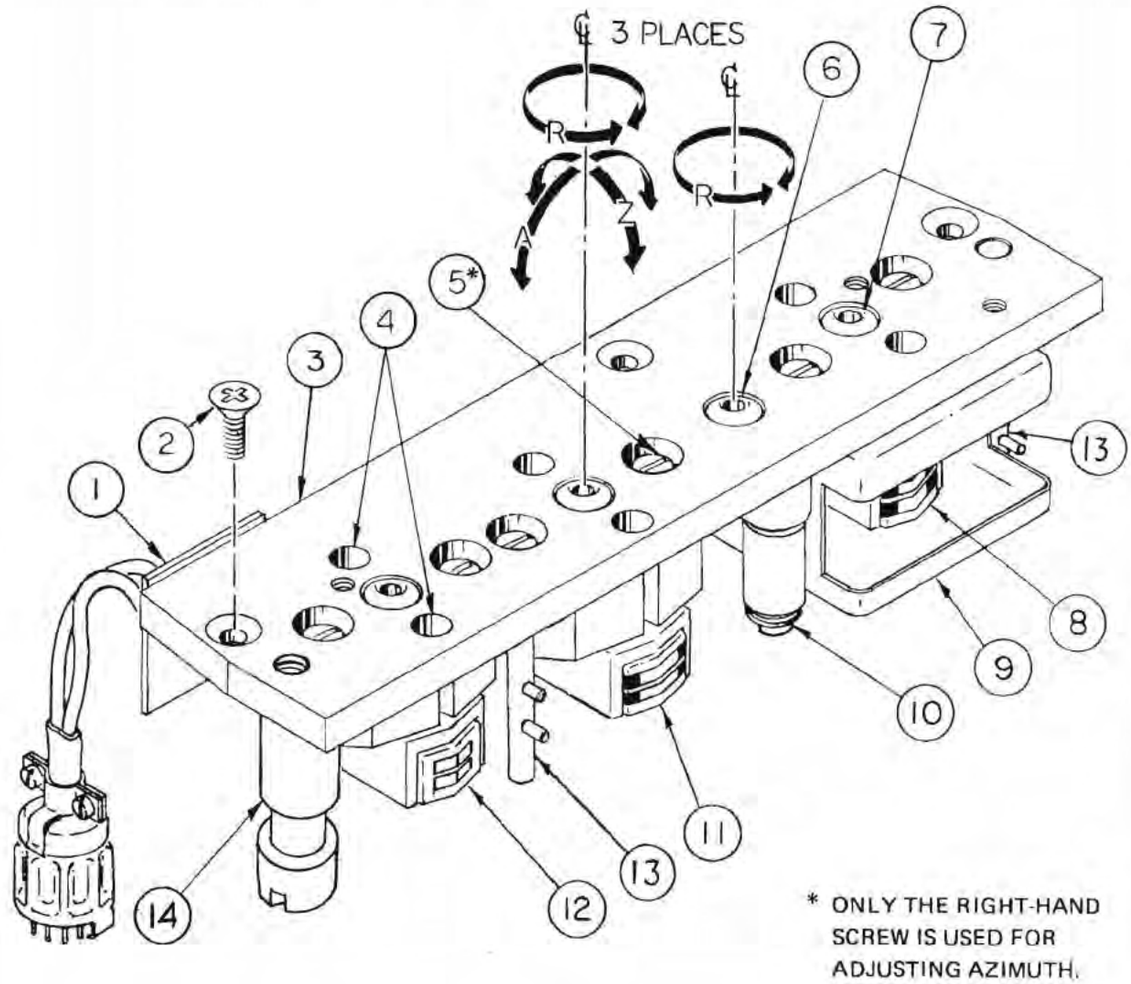

LEGEND

1 ERASE HEAD MATCHING BOARD
2 HEAD BRIDGE MOUNTING SCREWS
3 HEAD BRIDGE MOUNTING PLATE
4 HEAD ZENITH ADJUSTMENT ACCESS
5 HEAD AZIMUTH ADJUSTMENT SCREW
6 SCRAPE FILTER ROTATION ADJUSTMENT SCREW
7 HEAD ROTATION ADJUSTMENT SCREWS
8 PLAYBACK HEAD STACK ASSY
9 PLAYBACK HEAD SHIELD
10 SCRAPE FILTER ASSY
11 RECORD HEAD STACK ASSY
12 ERASE HEAD STACK ASSY
13 TAPE GUIDE POSTS
14 INPUT TAPE GUIDE

Figure 7-3. Head Adjustment

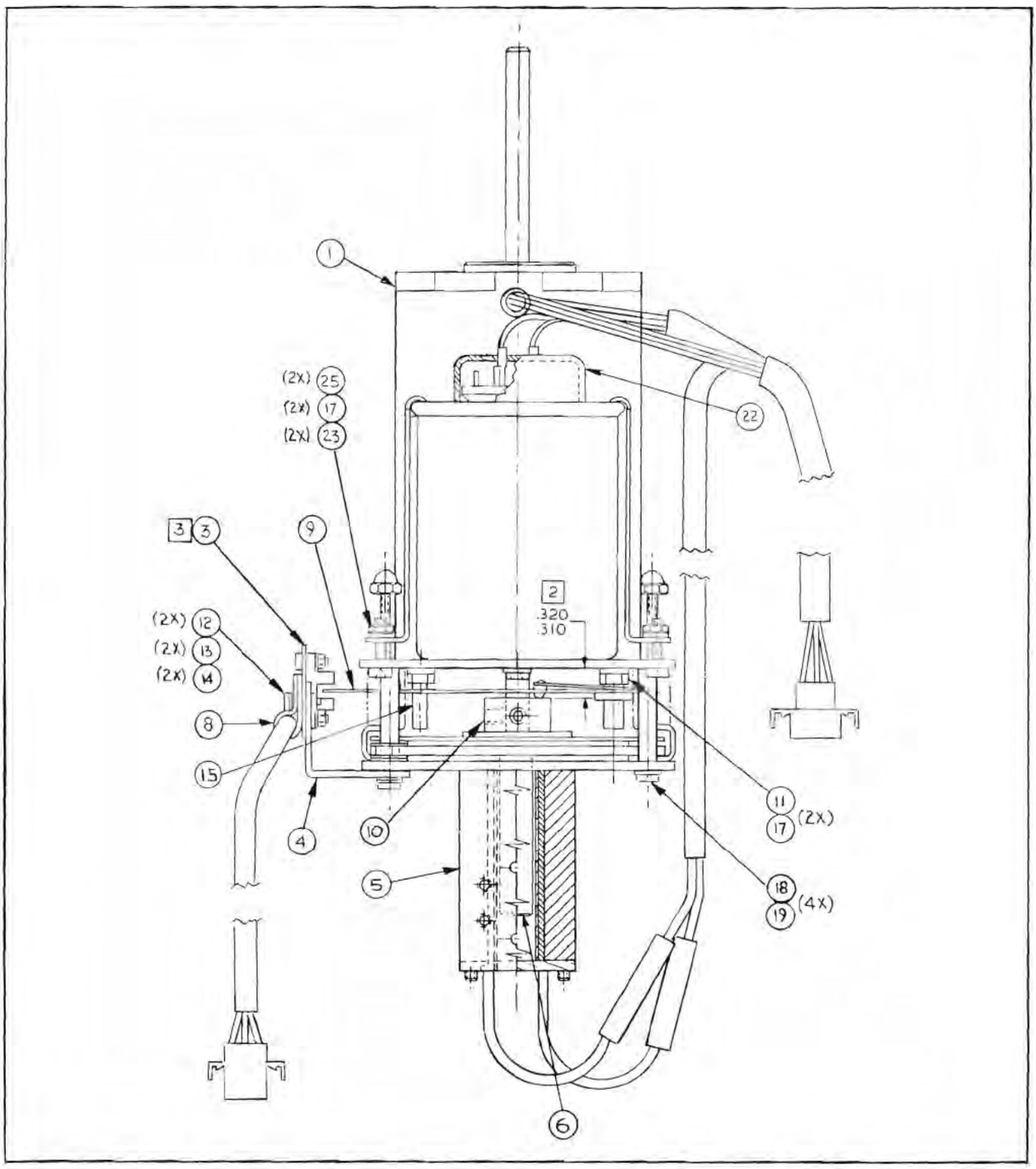

Figure 7-4. Motion-Direction Sense Adjustment

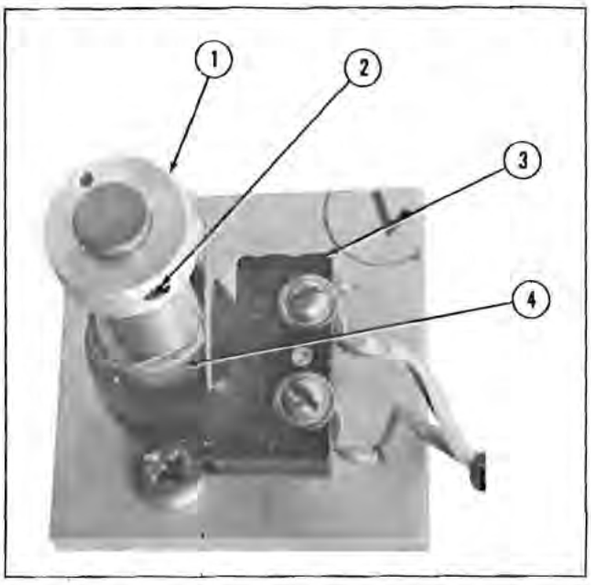

Figure 7-5. Tension Post Adjustments

arm hits its nylon stop. On rack-mounted units (transport operated in the vertical position), set the tension of the tape break arm to the minimum tension required to prevent the arm from resting at the dead center (vertical) position.

7-6. Pinch Roller Adjustment (Figure 7-6)

The pinch roller adjustment is made by means of the nut (2) at the end of the threaded connecting rod (3) which provides the link between the solenoid (4) and the pinch roller actuating arm (7). Tightening this nut (2) increases the roller pressure. Excessive pressure places an unnecessary and undesirable load on the upper (sleeve) bearing of the capstan motor, and a point is reached where further turning of the nut will prevent the solenoid plunger from bottoming. At this point, roller pressure drops rapidly, becoming inadequate to drive the tape without slippage. It is then necessary to back off the nut.

The rubber pinch roller bearing has been selected for minimum radial runout. The radii of the inner and outer raceways of this bearing are larger than the ball; therefore, some rocking freedom can be felt. When the pinch roller is actuated, this freedom

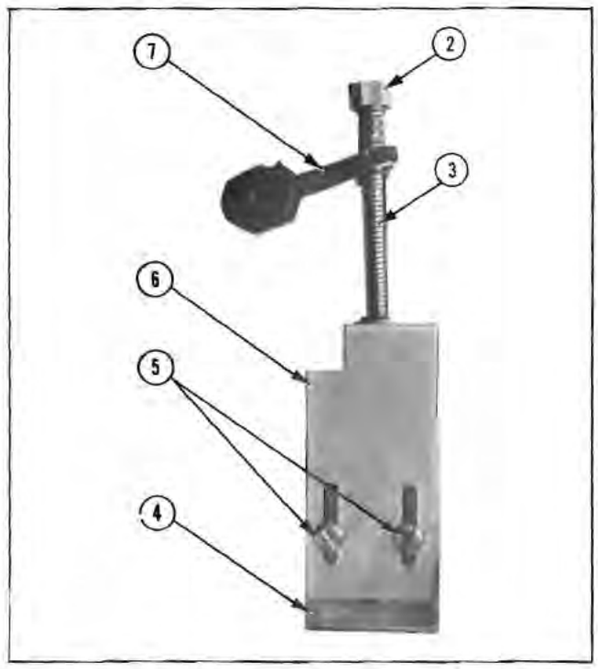

Figure 7-6. Pinch Roller Adjustment

allows the face of the pinch roller to align with the capstan, thereby minimizing tape distortion from any scrubbing action between these two components. The pinch roller adjustment procedure is as follows:

A. Thread tape on the machine. Remove tape from between the capstan and pinch roller so that the tape rides on the bottom (operator) side of the capstan when the machine is in the Play mode.

B. Loosen the Allen setscrew on the capstan solenoid adjustment nut (2).

C. With the machine in the Play mode, use a zero-to-15 lb (6.81 kg) tension scale to push against the arm in line with the pinch roller shaft. Align scale pressure so that the force of the scale tends to remove the pressure of the roller from the shaft.

D. Push on the scale until the pinch roller stops rotating, indicating that the pinch roller had just broken contact with the capstan.

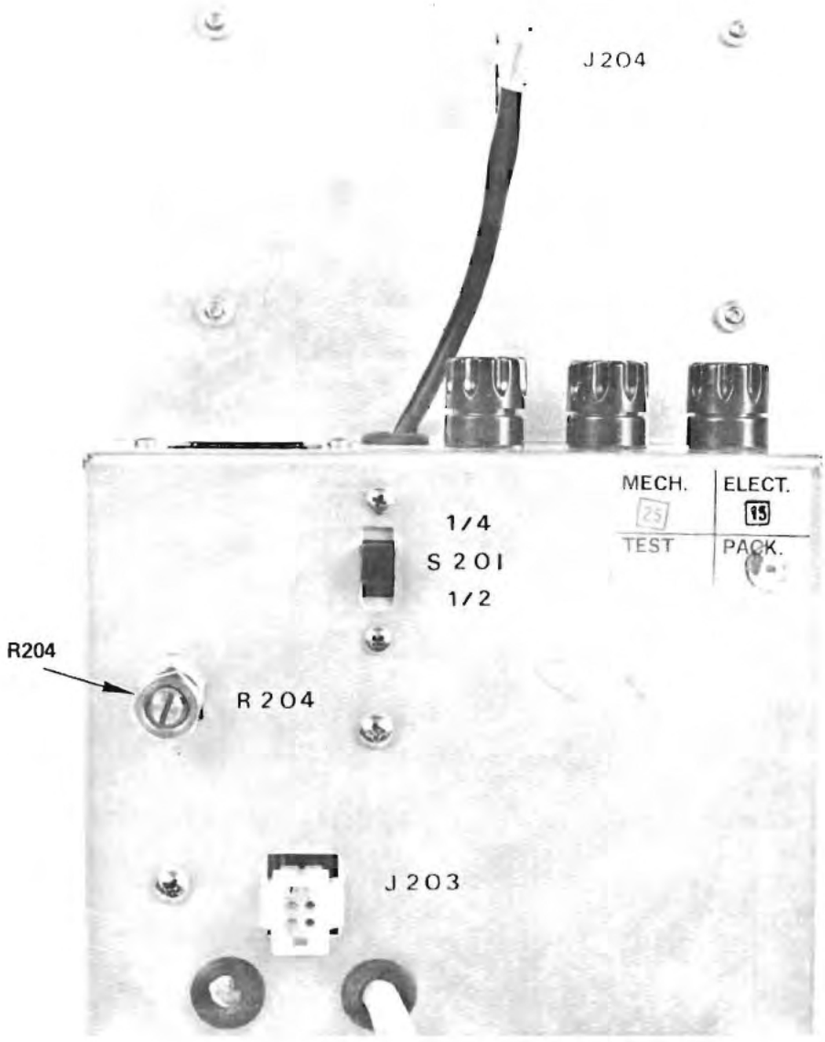

Figure 7-7. Power Supply

E. Adjust the capstan solenoid adjustment nut (2) to obtain a 6 lb (2.72 kg) indication on the tension scale.

F. Tighten the Allen setscrew on the solenoid adjustment nut (2).

G. Check the gap between the pinch roller and capstan. The gap should be approximately 0.10 to 0.30 (2.54 to 7.62 mm). Readjust the gap by moving the L-shaped stop bracket (6) mounted to face of capstan solenoid. Loosen the two screws (5) in slotted holes and move the bracket as required. Be sure that the rod (3) from the solenoid to the pinch roller does not bind in the slot of the bracket.

7.7 Constant Tension Adjustment

CAUTION

High voltage is present on the tension sensor PWA.

A. Open the screw valve on the airpot until the damping effect is not noticeable.

B. Connect a Simpson Model 270 or equivalent VOM set to the 250 Vac scale, across the supply motor terminals (J106 pin 3 and NEUTRAL).

C. Loosen the locknut on resistor R204 on the power supply, Figure 7-7. Turn R204 for a minimum resistance (fully ccw). Hold a piece of black paper in the slot of the opto coupler. Put the machine in Play mode and observe the VOM. It should indicate 85 ±5 volts rms.

D. Turn R204 cw until the voltage drops 3 volts rms. Record this voltage. Tighten the lock nut on R204.

E. Check that the optical grating is rotating in the center of the opto coupler slot as shown in Figure 7-8 A and B.

F. Loosen the setscrew on the coupler, Figure 7-8A, and move the dancer arm to the fully ccw (from the top) position. Position the optical grating for minimum voltage reading across the motor (see Figure 7-8C). The VOM should indicate 8 ±3 volts rms.

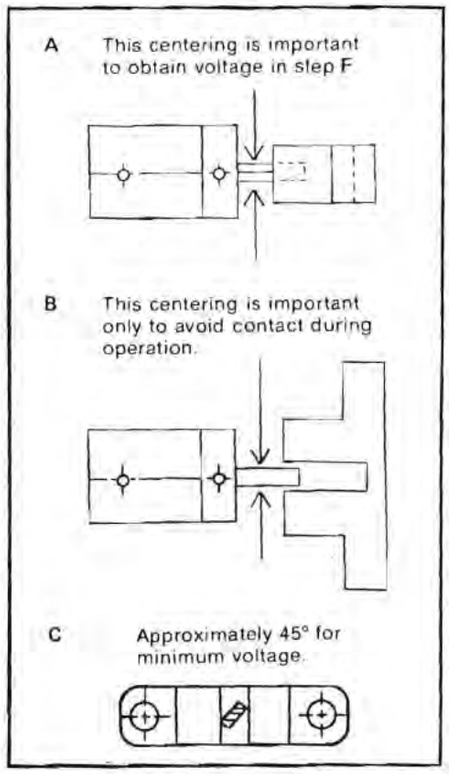

Figure 7-8. Constant Tension Adjustment Procedures.

G. Move the dancer arm to the 7:00 o'clock position (from the top). The voltage should be the same as recorded in step D.

H. Place a tape tensiometer on the tape between head bridge and capstan. Adjust spring on constant tension, Figure 7-9, to obtain proper tension as shown below:

0.25 in tape = 3.5 to 4.5 oz
0.50 in tape = 7 to 8 oz

I. Close screw valve on airpot until the damping effect causes the arm to bounce as it turns to the stop. Open screw valve enough to allow smooth travel of the arm. Open screw valve one complete rotation.

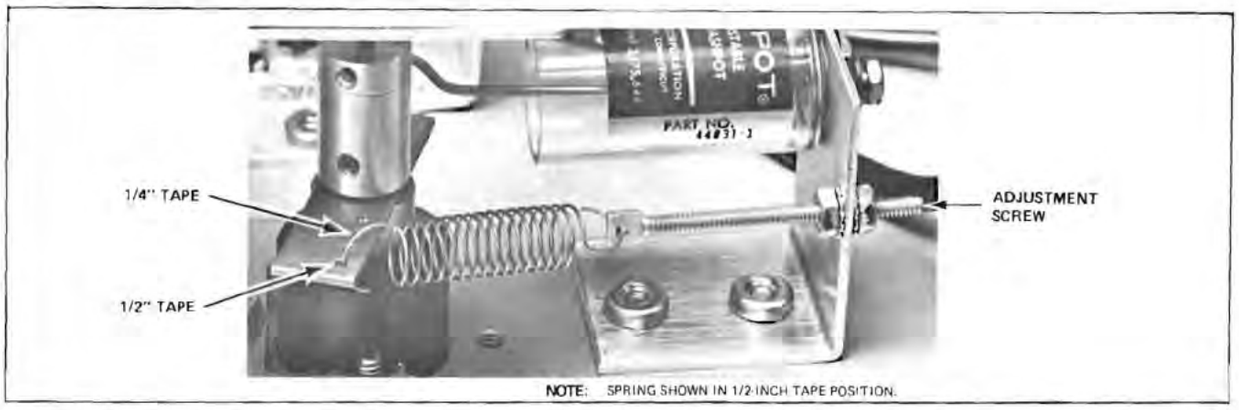

Figure 7-9. Constant Tension Assembly

7.8 ATL Adjustments (Figure 7-10)

A. Check that the plunger stop collar (3) is flush with the end of the solenoid plunger (7) and that the setscrew (2) is tight.

B. Check that there are two felt bumpers (4 and 8) on each side of the plunger stop collar (3).

C. Set the plunger solenoid stop (5) so that it is 1.0 inch (25.4 mm) from the front face of the solenoid, as shown in Figure 7-10. Then tighten the two adjustment screws (6) securely.

D. Loosen the setscrew (1) in the actuating arm and position the tape lifter post (9) so that it clears the tape by 0.025 to 0.050 inch (0.635 to 0.270 mm) when the solenoid is de-energized.

NOTE

When the ATL is correctly adjusted the felt bumpers will stop the motion of the ATL at both extremes of travel.

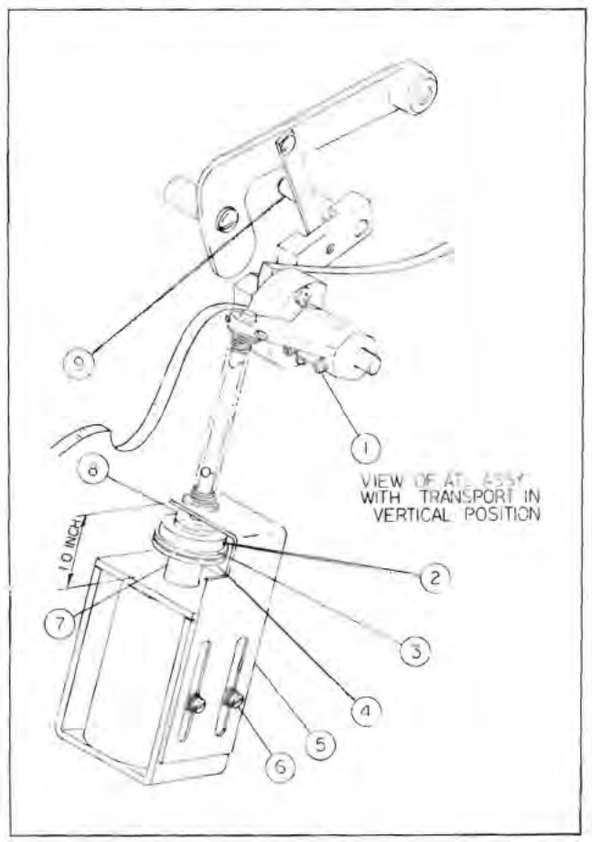

Figure 7-10. ATL Adjustment

7.9 CHECKOUT AND ALIGNMENT PROCEDURES

The following checkout and alignment procedures should be performed at the time of installation and

at other times deemed desirable by the user. In multi-track machines, these procedures must be repeated for each channel. The demagnetizing procedure described in paragraph 4.4 should be performed prior to any checkout and alignment.

7.10 Test Equipment Required

The following test equipment, or equivalent, is required to perform the checkout and alignment procedures and for troubleshooting the machine:

- Standard alignment or test tape
- Audio Oscillator, Hewlett-Packard Model 204D
- AC Voltmeter, Hewlett-Packard Model 400F
- Flutter Meter, BHK Electronics Model F2
- Frequency Counter, Hewlett-Packard Model 5245M
- Recording Tape, 3M 206
- Oscilloscope, Tektronix, Model 434 (20 MHz or better) with 10:1 probe
- Alignment tool, Scully Part No. 162235 (supplied with amplifiers)
- 400 Hz Filter, TRW Type No. BPM-400
- Volt-Ohm Milliammeter, Simpson Model 260
- Weighting Filter, ASA "A" Curve Standard S1.4-1961

7.11 Preliminary Procedures

To perform the following procedures, make the test setup shown in Figure 7-11 and proceed as follows:

A. Thread a standard reproducer alignment tape on the recorder.

B. Set controls as follows:

- CAPSTAN speed selector switch to HIGH
- Function switch to SAFE
- Monitor switch to PLAYBACK
- PLAYBACK LEVEL switch to CAL

C. Open the electronics drawer for access to calibration adjustments (Figure 7-12).

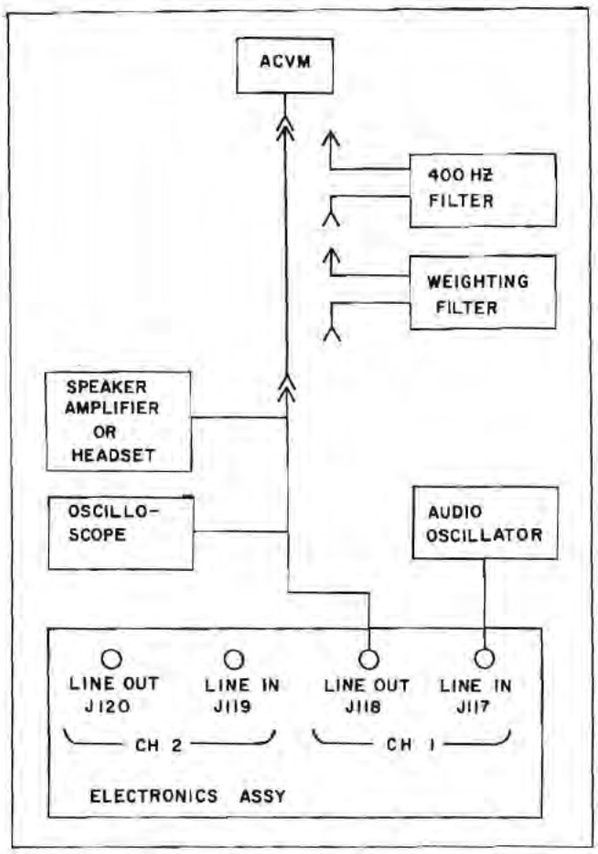

Figure 7-11. Initial Test Setup

7.12 Playback Alignment

A. Begin tape motion by pressing START push-button. Monitor the output on the external ac voltmeter or recorder vu meter and speaker.

B. Adjust the PLAYBACK LEVEL CAL potentiometer (located in the center of the PLAYBACK LEVEL knob) for 0 vu (+4 dBm) at reference frequency and fluxivity on the reproducer alignment tape.

C. Adjust the azimuth of the playback head for a maximum signal output on the ACVM using the right-hand slotted-head screw located on top of the head bridge mounting plate (Figure 7-13).

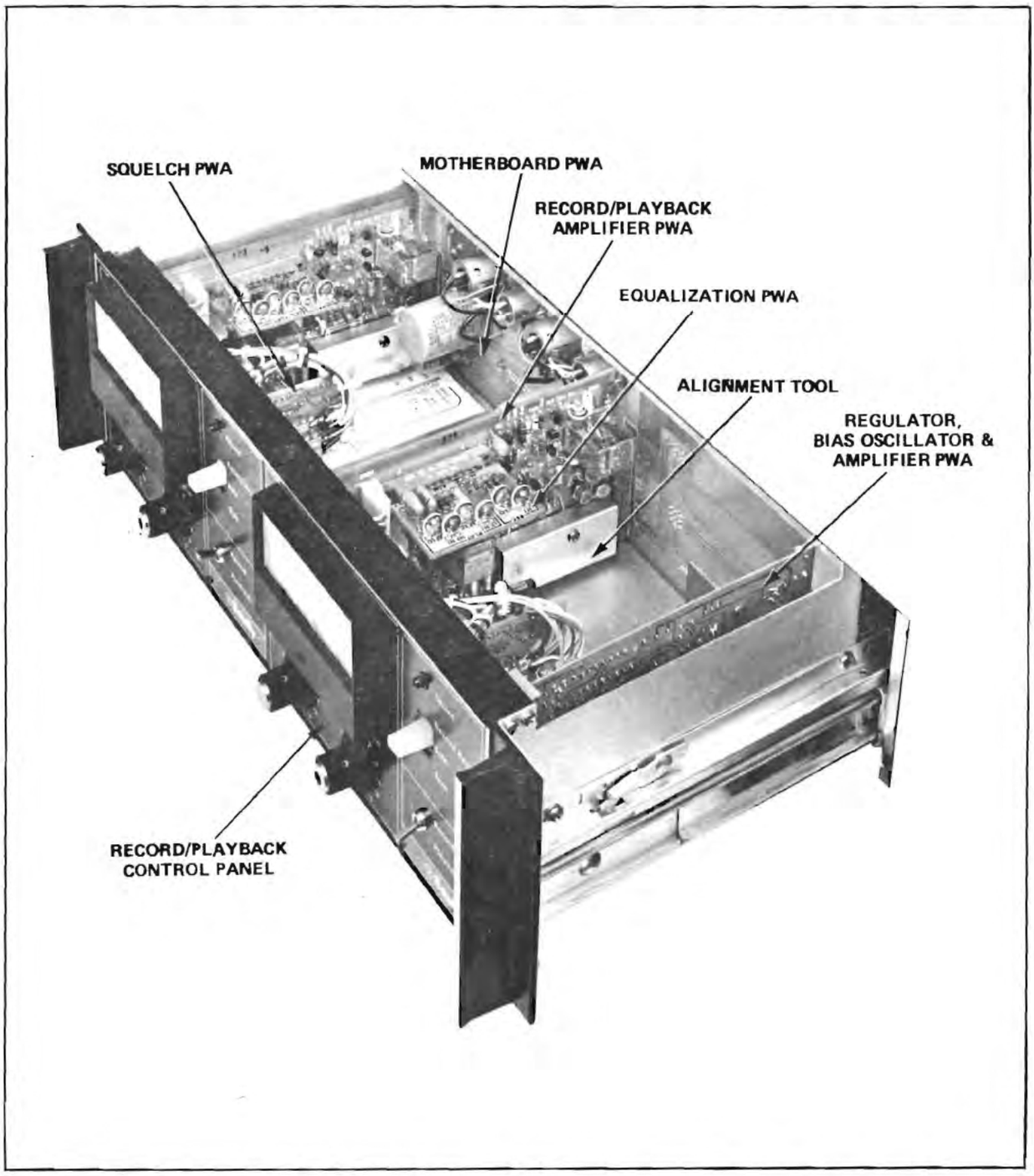

Figure 7-12. Electronics Assembly, Top View

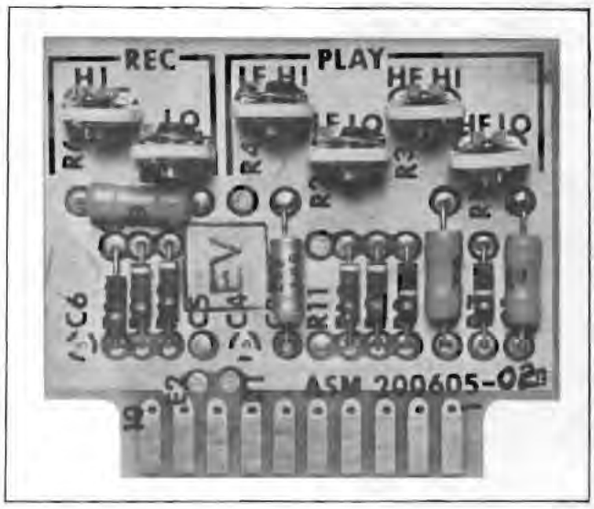

Figure 7-13. Equalization PWA Adjustments

D. Following instructions from the standard test tape, adjust equalization for flattest response. Adjust HF HI for high speed and HF LO at low speed (Figure 7-13). Low frequency adjustments should be made in Record mode in order to compensate for fringing effects on multi-track machines.

E. Set Function switch to SYNC position.

F. At corrected (250 nWb/m) reference tone from the standard test tape, adjust sync level potentiometer R7 (Figure 7-14) on the record/playback amplifier PWA for 0 vu, (+4 dBm on external meter).

NOTE

The standard operating level (playback fluxivity) is as follows:

3.75 & 7.50 in/s = 200 nWb/m at 1000 Hz
7.50 & 15.00 in/s = 250 nWb/m at 1000 Hz
15.00 & 30.00 in/s = 250 nWb/m at 1000 Hz

7.13 Record Alignment

A. Connect oscilloscope to the yellow test point (TP1) on the regulator, bias oscillator, and amplifier PWA (Figure 7-15).

B. Adjust bias level potentiometer R10 on the regulator, bias oscillator, and amplifier PWA for 40 volts p-p using the oscilloscope.

C. On four-track systems, repeat steps A and B to adjust R6 on the bias amplifier PWA (Figure 7-16) for channels three and four.

D. Install 3M 206 tape or equivalent.

E. Set Function switch to RECORD and CAPSTAN speed switch to HIGH.

F. Press START and then RECORD pushbuttons on transport.

G. Visually align record head height to correspond with playback head.

H. Record 15 kHz at -10 vu.

I. Adjust record head azimuth and check head rotation for proper gap contact.

7.14 Record Bias Set

A. Record 10 kHz at approximately zero vu level with Monitor switch in PLAYBACK position (-10 vu for 7.5 to 3.75 in/s machines).

B. Rotate R6 bias adjust on the record/playback amplifier PWA (Figure 7-14) until a peak reading is indicated on the vu meter.

C. Rotate the bias adjust potentiometer in a CW direction (increasing bias) until the level on the vu meter drops exactly 4 dB for 3.75 to 7.5 in/s machines at the 7.5 in/s speed, and 2 dB for 7.5 to 15 and 15 to 30 in/s machines at the 15 in/s speed.

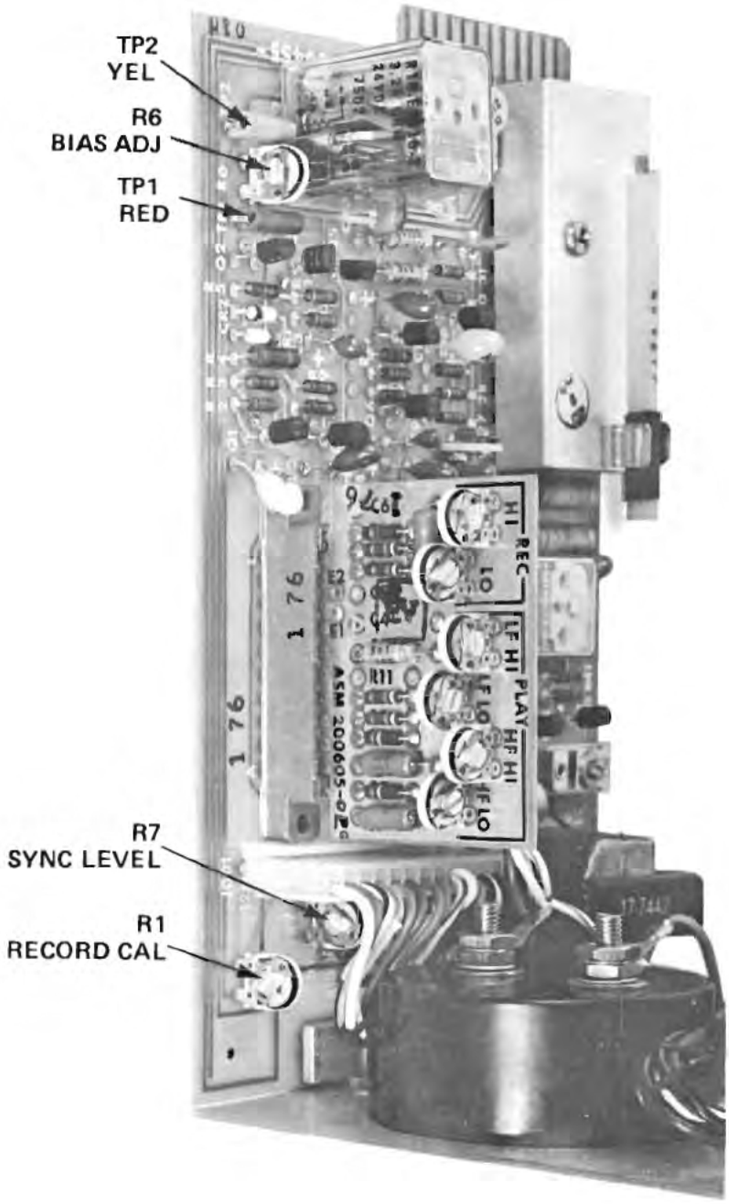

Figure 7-14. Record/Playback Amplifier PWA Adjustment and Test Points

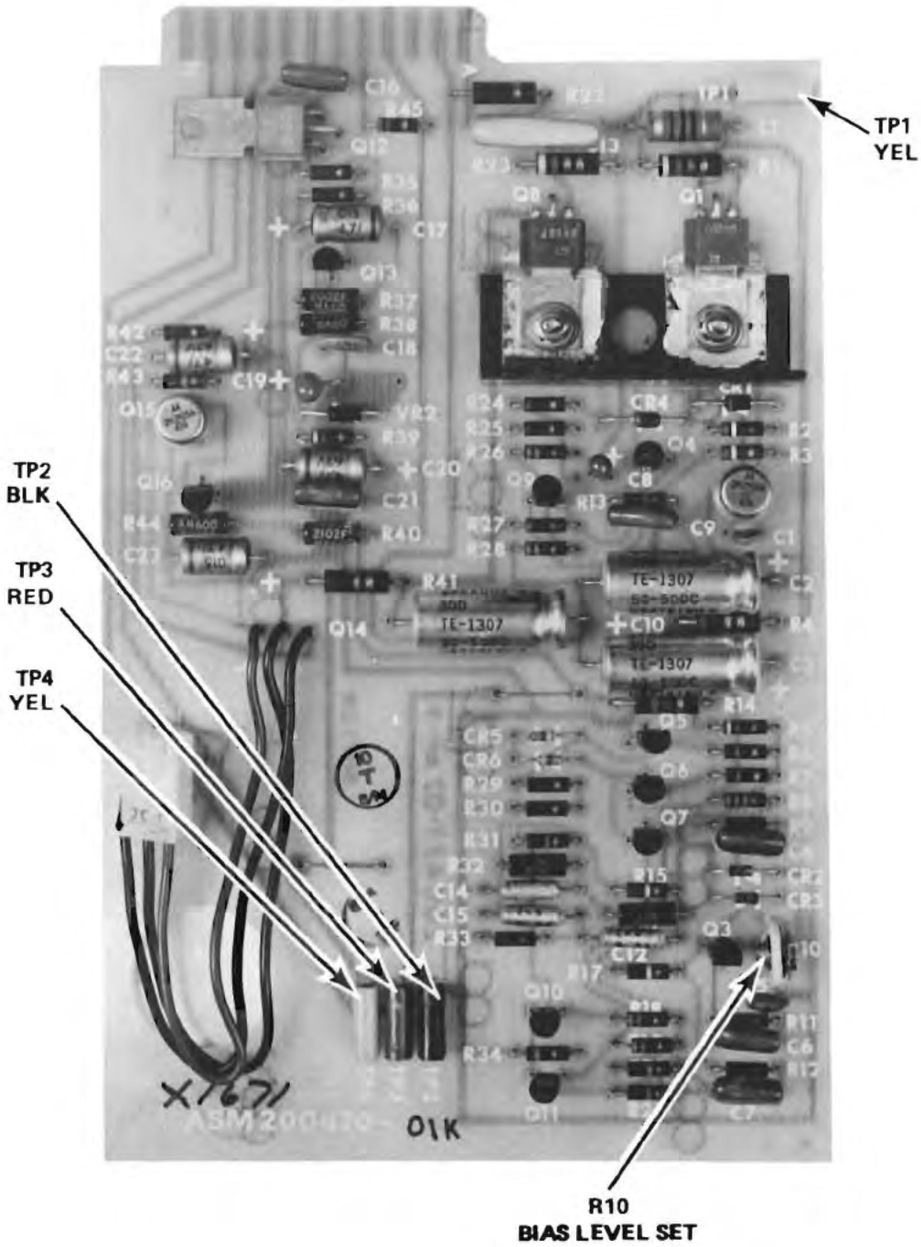

Figure 7-15. Regulator, Bias Oscillator and Amplifier PWA

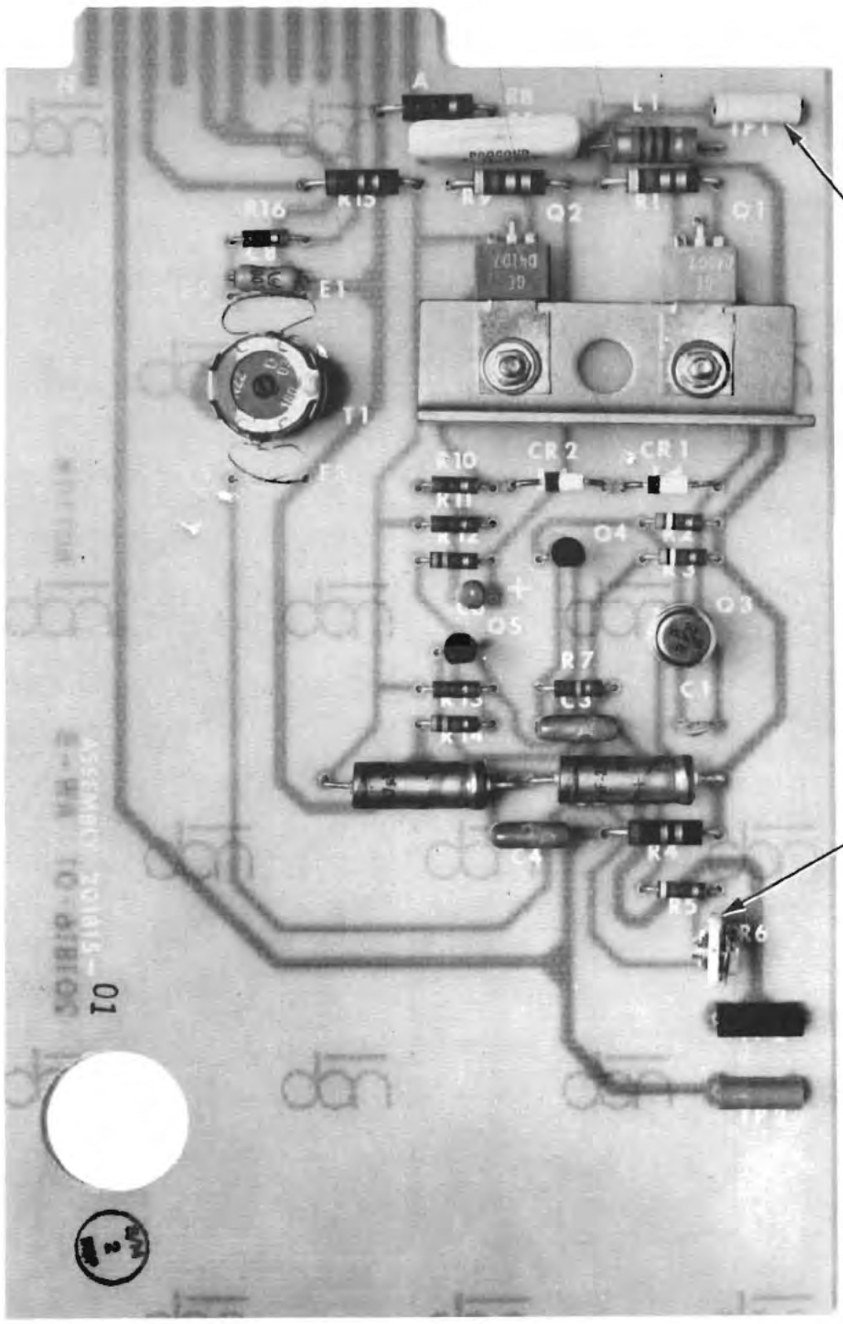

Figure 7-16. Bias Amplifier PWA Adjustment and Test Points

7.15 Record Calibrate Alignment

A. Set Monitor switch to PLAYBACK position. Record 1 kHz.

B. Adjust RECORD LEVEL control on front of record/playback control panel until front panel vu meter records zero vu.

C. Set Monitor Switch to RECORD.

D. Adjust record calibrate potentiometer R1 on record/playback amplifier PWA for zero vu.

E. Set Monitor switch to PLAYBACK. Input and output levels should correspond.

7.16 Record Equalization

A. Before making any record equalization adjustment, be sure that record bias set and record calibrate have been performed.

NOTE

Record equalization adjustments are made at zero vu operating level or less at 15 in/s, and at -10 vu or less at 7.5 and 3.75 in/s.

B. Record 1000 Hz at a convenient reading on the vu meter.

C. According to the speed selected (high or low) sweep the oscillator while adjusting REC HI at the high speed for flattest response at the upper frequencies and PLAY LF HI at frequencies below 150 Hz.

D. Repeat at low speed using controls marked REC LO and PLAY LF LO.

7.17 Erase Alignment

Visually align erase head height to correspond to record and playback heads.

7.18 Depth of Erase

A. Record a 1000 Hz tone at +6vu (+10 dBm on voltmeter) for several minutes. Remove input signal.

B. Rewind tape to beginning of 1000 Hz tone.

C. Connect the output of the machine through a 1000 Hz filter to the ac voltmeter.

D. Place the machine in the Record mode and check the erase head rotation for proper gap control.

E. Erase should be at least -75 dB (from +10 dBm) as indicated on the ac voltmeter.

7.19 Signal-to-Noise Ratio

A. Connect the output of the machine through a weighting filter (ASA Standard S1.4-1961) to an ac voltmeter.

B. Place the machine in the Record mode with no signal input. The output should be as follows (when referenced to +6 vu), after correcting for the insertion loss of the filter:

TAPE SPEED	FULL TRACK 0.25"	HALF TRACK 0.25"	TWO TRACK 0.25"	FOUR TRACK 0.25"	FOUR TRACK 0.25"
30 in/s	72 dB	68 dB	68 dB	68 dB	65 dB
15 in/s	72 dB	68 dB	68 dB	68 dB	65 dB
7.5 in/s	72 dB	68 dB	68 dB	68 dB	65 dB
3.75 in/s	68 dB	64 dB	64 dB	64 dB	61 dB

7.20 Distortion

A. Connect recorder input to ACVM and oscillator.

B. Connect recorder output to wave analyzer.

C. Set oscillator to 500 Hz at +4 dBm.

D. Adjust RECORD LEVEL knob to zero vu (-10 vu for 3.75 in/s).

E. Set wave analyzer to 500 Hz.

F. Set PLAYBACK LEVEL knob to CAL position.

G. Adjust range selector knob on wave analyzer to 3V range.

H. Adjust calibration on wave analyzer to 1V reading.

I. Reset wave analyzer to 1.5 kHz (third harmonic).

J. Readjust selector knob on wave analyzer until a reading is indicated on the meter.

K. Compare reading at 1V to the reading on the third harmonic. It should be less than 0.6%.

7.21 Flutter

To check flutter, use ANSI. S4.3-1972 method. Flutter shall not exceed the values listed on page 1-2.

SECTION 8
SCHEMATIC DIAGRAMS AND PARTS LIST

8.1 GENERAL

This section of the manual contains all schematic diagrams, parts list and assembly drawings for the Model 280B Series Recorder/Reproducers. All schematics are at the front of the section, followed by the parts list. Each parts list precedes its related assembly drawing.

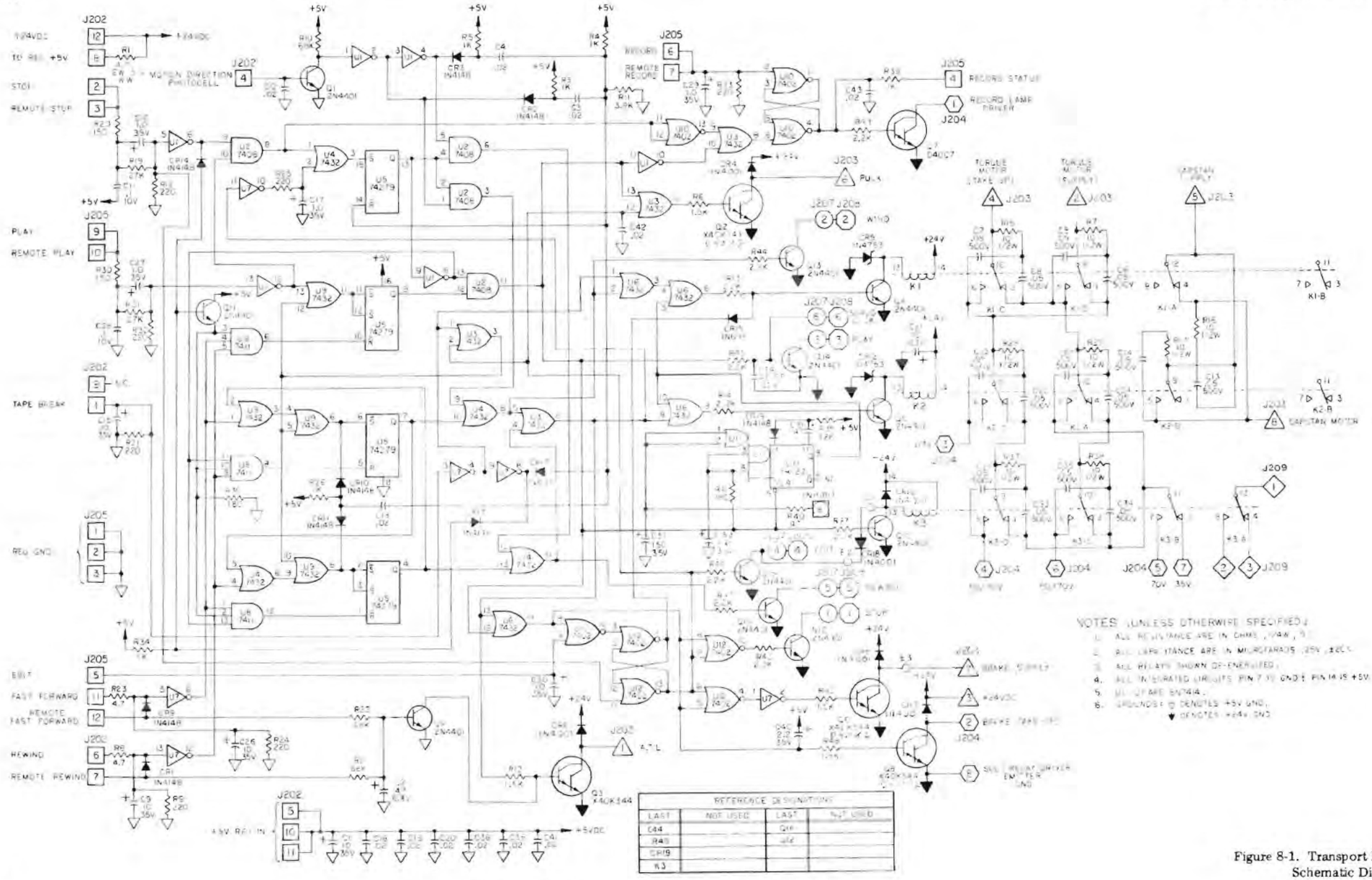

202783A

Figure 8-1. Transport Logic, Schematic Diagram

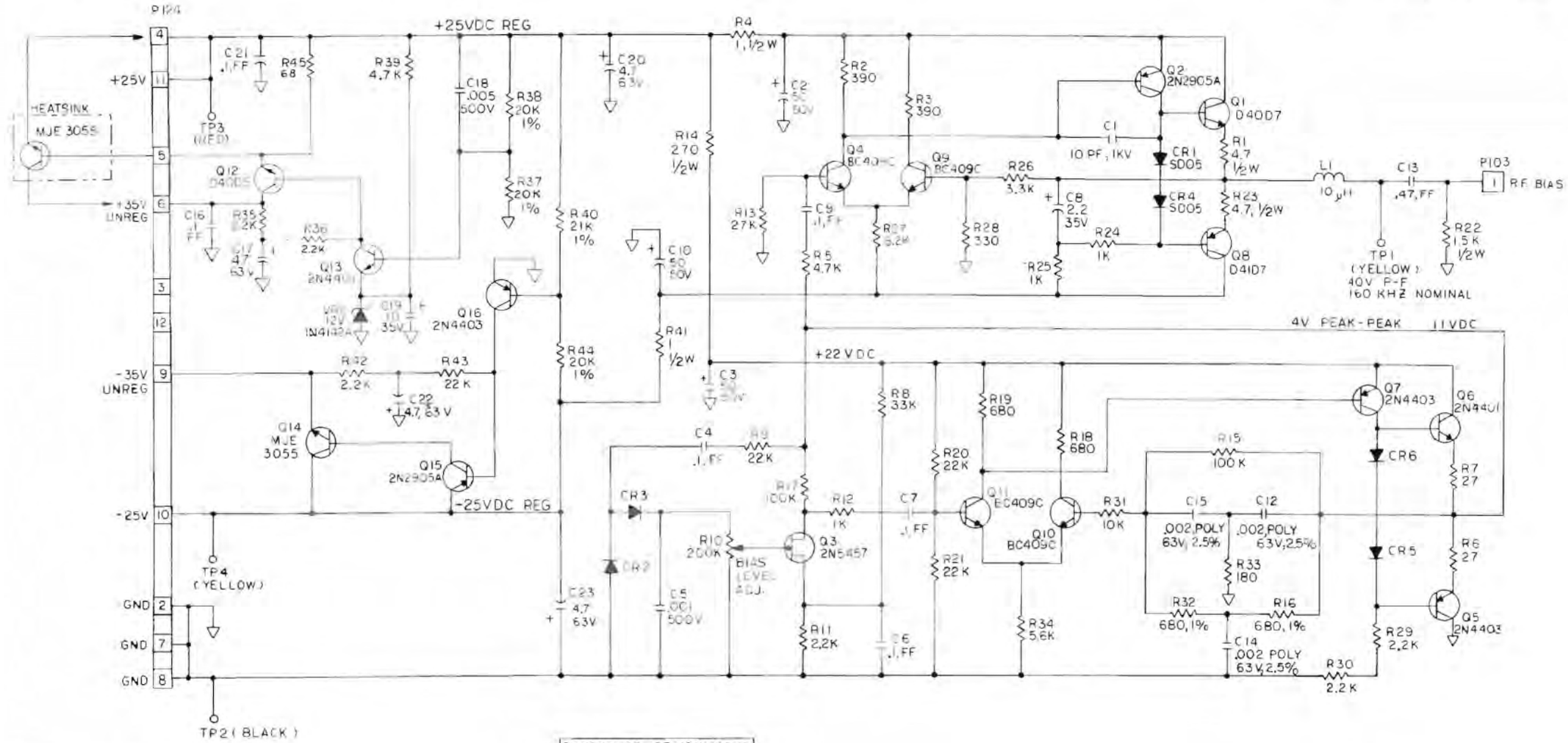

NOTES: UNLESS OTHERWISE SPECIFIED:

2. ALL CAPACITANCE VALUES ARE IN MICROFARADS, 250 VOLTS ABBREVIATION: FF= FLAT FOIL TYPE, POLY= POLYSTYRENE
3. ALL DIODES ARE IN4148
4. ALL 1/2W RESISTORS ARE 5%
5. ALL 1% RESISTORS ARE 1/4 W

REFERENCE DESIGNATIONS	
LAST USED	NOT USED
R45	
C23	C11
VR2	VR1,3
L1	
CR6	
Q16	
TP4	

200472L

Figure 8-2. Regulator, Bias Oscillator and Amplifier PWA, Schematic Diagram

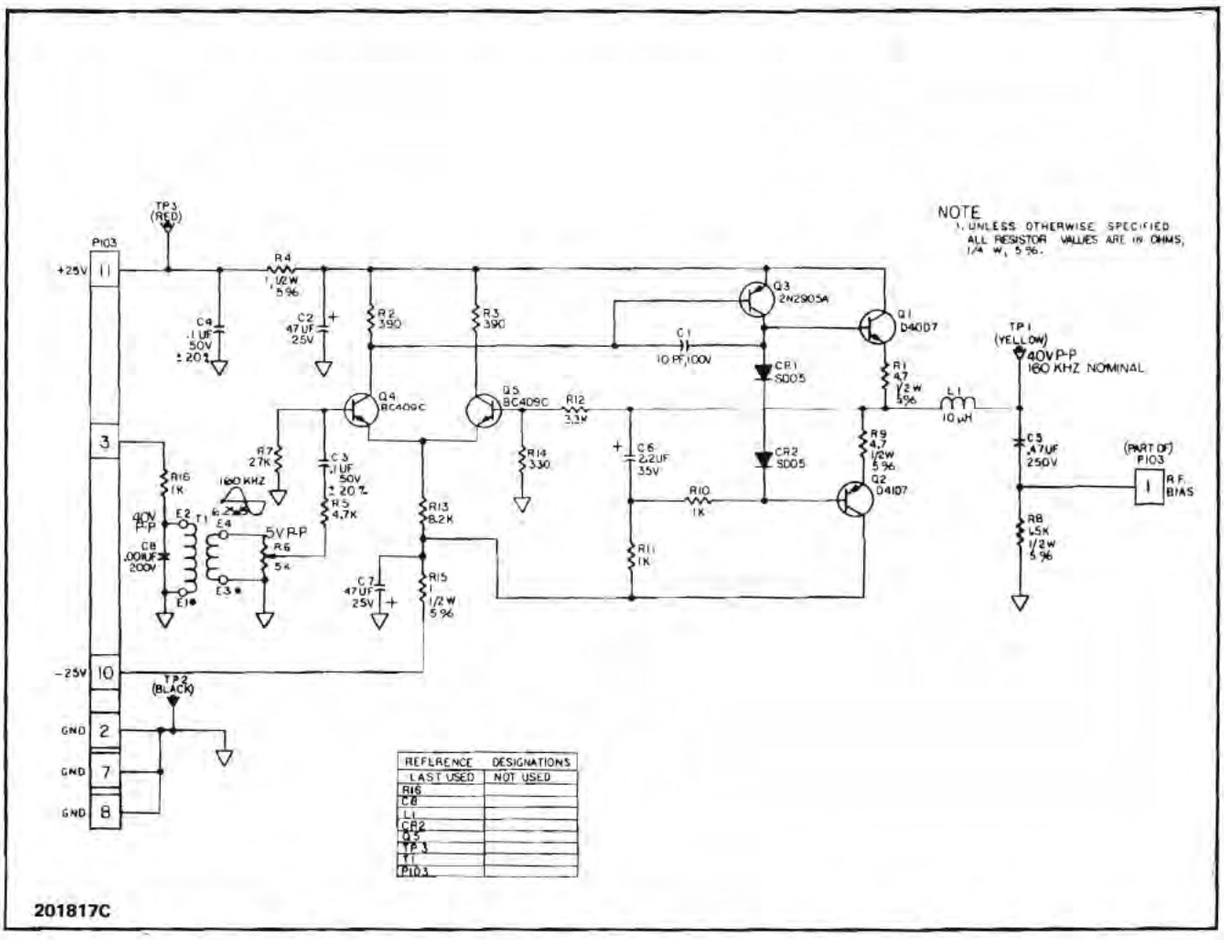

201817C

Figure 8-3. Bias Amplifier PWA Schematic Diagram

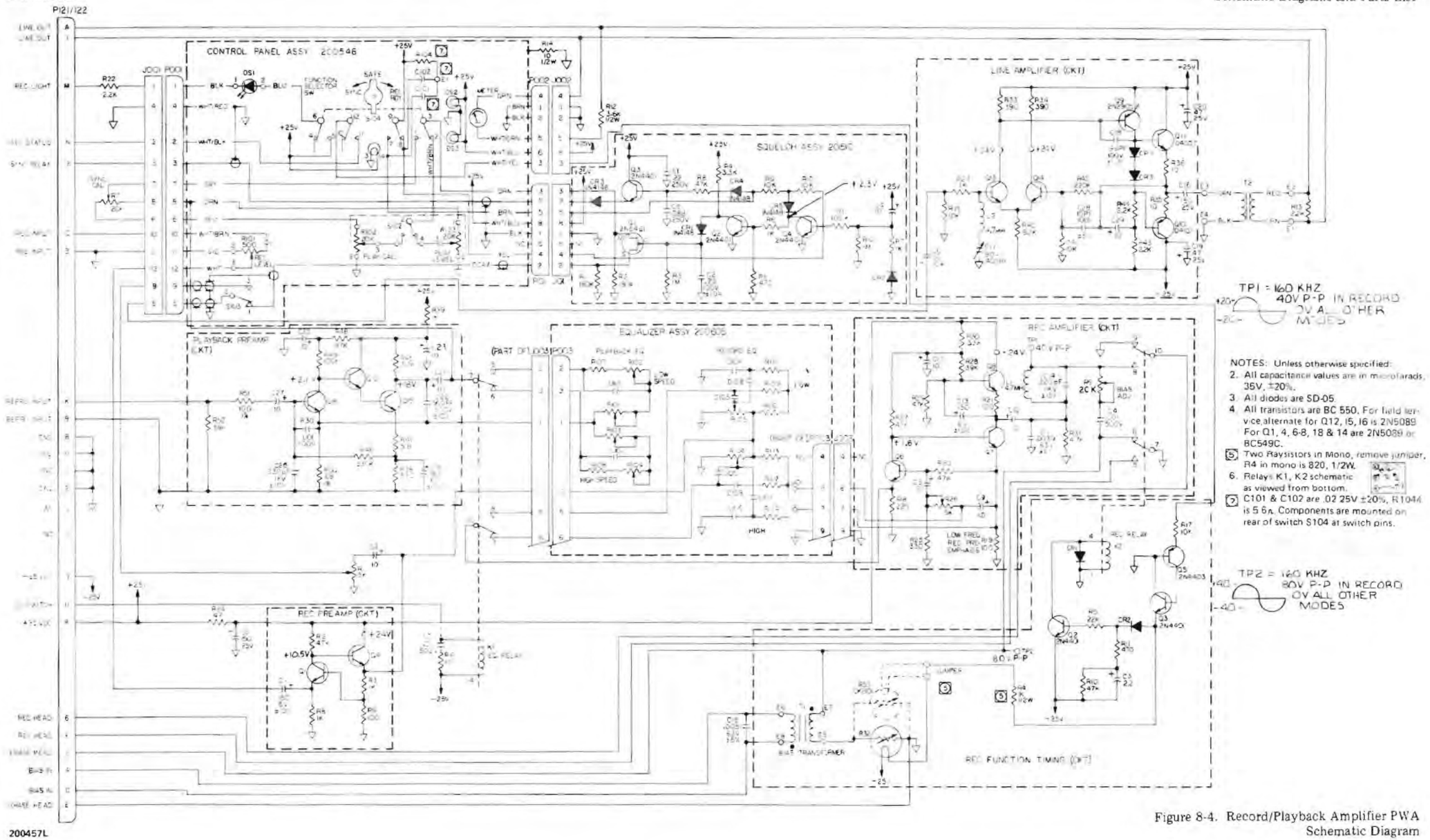

Figure 8-4. Record/Playback Amplifier PWA Schematic Diagram

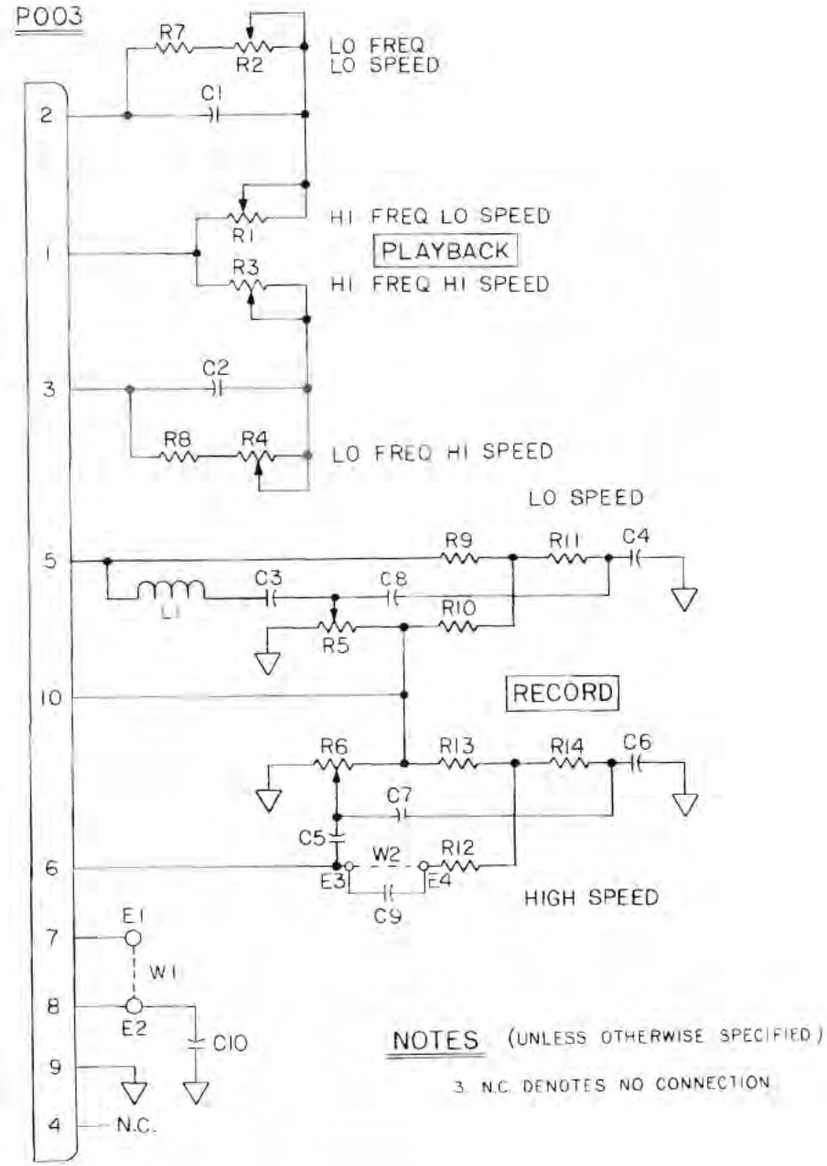

NOTES (UNLESS OTHERWISE SPECIFIED)

3. N.C. DENOTES NO CONNECTION

COMPONENT VALUES						
VE	-01	-02	-03	-04	05	06
COMP REF DES	NAB 3.75-7.5	NAB 7.5-15IPS	IEC 7.5-15IPS	NAB AES 15-30 IPS	IEC AES 15-30 IPS	DIN/IEC 3.75-15IPS
C1	MATCHED PAIR .0068μF	MATCHED PAIR .0068μF	MATCHED PAIR .0068μF	MATCHED PAIR .0068μF	MATCHED PAIR .0068μF	MATCHED PAIR .0068μF
C2						
C3	5100pF	5100pF	5100pF	—	—	5100pF
C4	—	—	.0068μF	—	—	—
C5	5100pF	—	—	—	—	5100pF
C6	—	—	—	—	—	.0068μF
C7	—	.015μF	.015μF	.015μF	.015μF	—
C8	—	—	—	.015μF	.015μF	—
C9	—	—	—	.33μF	.33μf	—
C10	.1μF	—	—	—	—	.1μF
R1	20K	20K	20K	20K	20K	20K
R2	1MEG	1MEG	1MEG	1MEG	1MEG	1MEG
R3	20K	20K	20K	20K	20K	20K
R4	1MEG	1MEG	1MEG	1MEG	1MEG	1MEG
R5	5K	5K	5K	20K	20K	5K
R6	20K	20K	20K	20K	20K	5K
R7	220K5%	220K,5%	330K	220K	330K	220K
R8	220K5%	220K,5%	330K	220K	330K	330K
R9	4.7K5%	4.7K,5%	4.7K,5%	4.7K	4.7K	4.7K
R10	4.7K5%	4.7K,5%	4.7K,5%	4.7K	4.7K	4.7K
R11	—	—	4.7K,5%	220	220	—
R12	4.7K5%	4.7K,5%	4.7K,5%	4.7K	4.7K	4.7K
R13	4.7K5%	4.7K,5%	4.7K,5%	4.7K	4.7K	4.7K
R14	—	220	220	220	220	4.7K
L1	10mH	—	—	—	—	10mH
W1	—	—	A/R	—	A/R	—
W2	A/R	A/R	A/R	—	—	A/R

REF DES	
LAST	NOT USED
C10	
R14	
E4	
P003	P001, P002
L1	

Figure 8-5. Record/Playback Equalization PWA

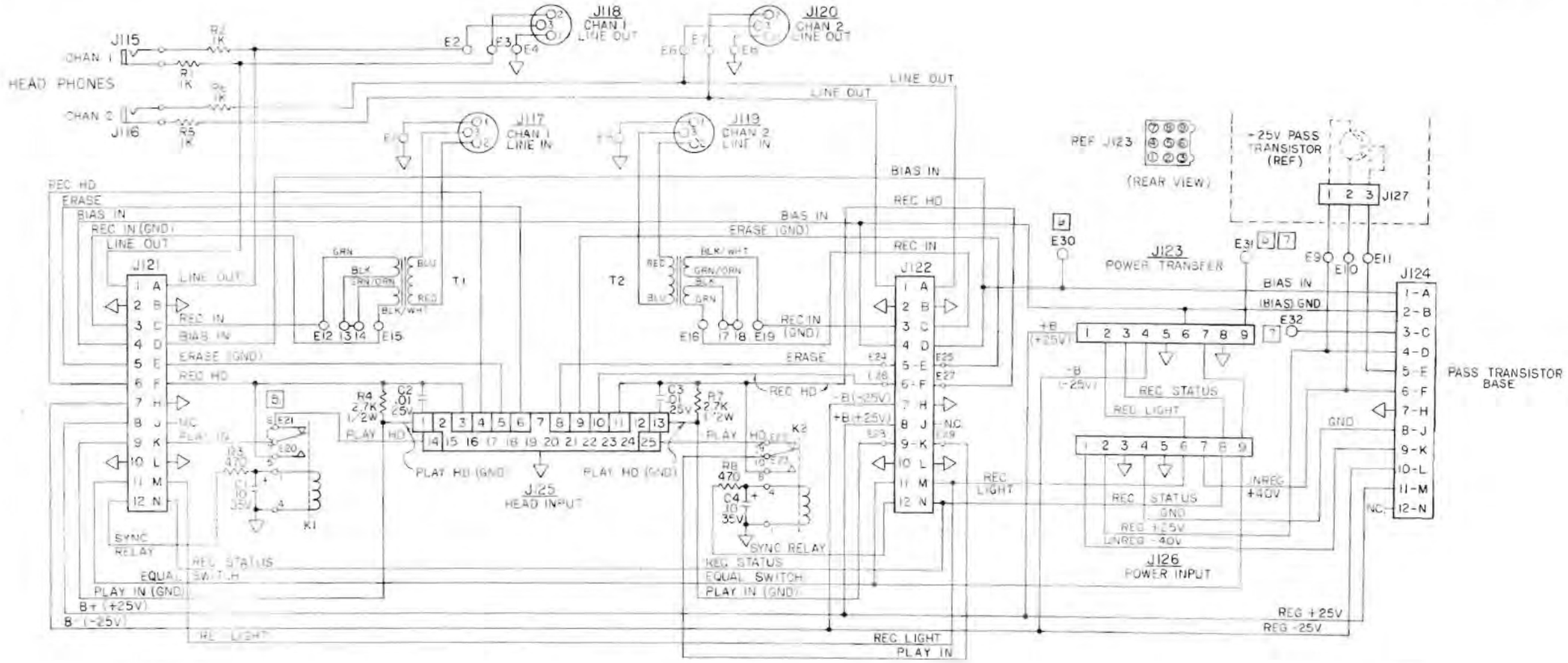

J121
CHAN 1 REC/PB

J122
CHAN 2 REC/PB

J124
REGULATOR, BIAS, OSC

SIMPLIFIED RELAY SCHEMATIC (REF K1 & K2)

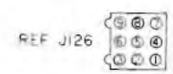

REF J126
(REAR VIEW)

NOTES (UNLESS OTHERWISE SPECIFIED)

1. ALL RESISTANCE VALUES ARE IN OHMS, 1/4W, 10%
2. ALL CAPACITANCE VALUES ARE IN MICROFARADS
3. RELAYS: PINS NOT USED -
   K1 PIN 8,9,10.
   K2 PIN 5,6,7.
4. N.C. DENOTES "NO CONNECTION"

[5] MONO VERSION ONLY INSTALL JUMPERS BETWEEN:
- E20 (K1 PIN 7) & E21 (K1 PIN 6)
- E22 (K2 PIN 9) & E23 (K2 PIN K)
- L24 (J122 PIN-5) & E25 (J122 PIN E)
- E26 (J122 PIN-6) & E27 (J122 PIN F)
- E28 (J122 PIN 9) & E29 (J122 PIN-K)
- E30 (J124 PIN-1) & E31 (J123 PIN-9)

[6] STEREO VERSION ONLY INSTALL JUMPER BETWEEN: E30 (J124 PIN-1) & E31 (J123 PIN-9)

[7] QUAD AND EIGHT VERSIONS ONLY INSTALL JUMPER BETWEEN: E31 (J123 PIN 9) & E32 (J124 PIN-3)

200467D

Figure 8-6. Motherboard PWA Schematic Diagram

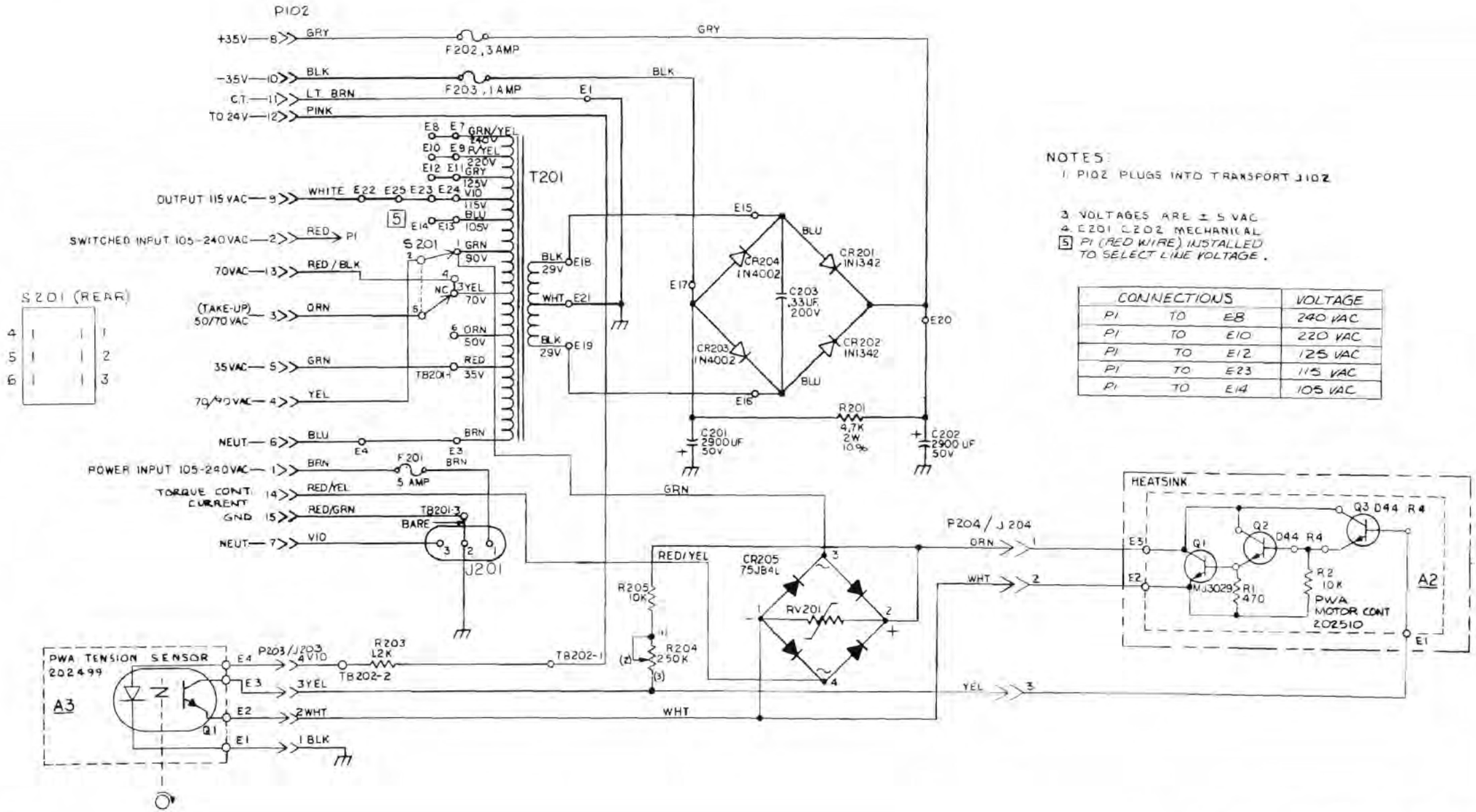

NOTES:

1. P102 PLUGS INTO TRANSPORT J102
3. VOLTAGES ARE ± 5 VAC
4. C201 C202 MECHANICAL
5. P1 (RED WIRE) INSTALLED TO SELECT LINE VOLTAGE.

CONNECTIONS			VOLTAGE
P1	TO	E8	240 VAC
P1	TO	E10	220 VAC
P1	TO	E12	125 VAC
P1	TO	E23	115 VAC
P1	TO	E14	105 VAC

202675A

Figure 8-7. Primary Power Supply, Schematic Diagram

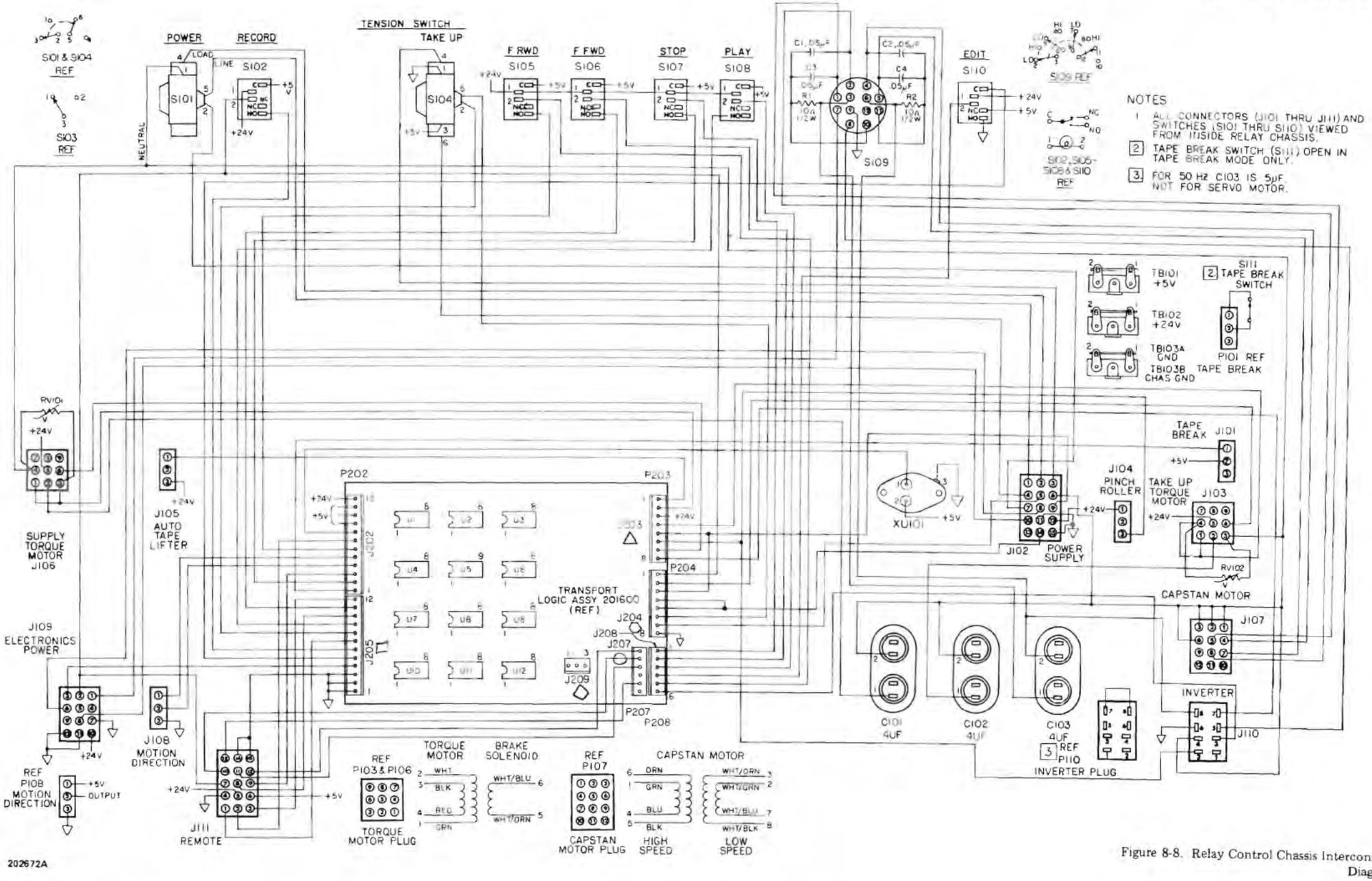

Figure 8-8. Relay Control Chassis Interconnect Diagram

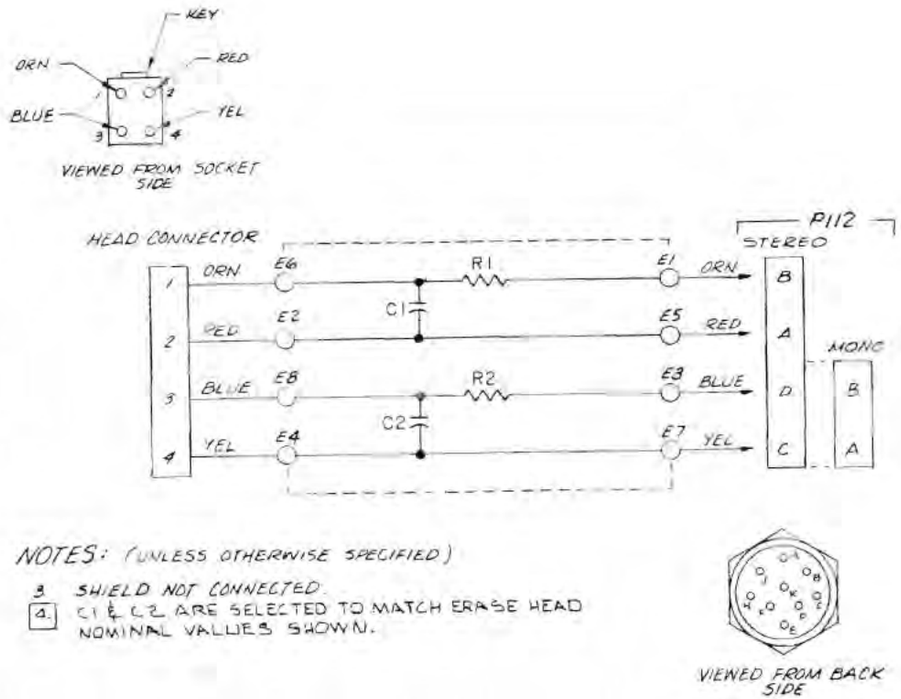

COMPONENT VALUES					
HEAD TYPE	MODEL	C1 4	C2 4	R1	R2
FULL TRK 1/4"	MONO	–	.01	–	100
2 TRK 1/4"	STEREO	.0051	.0051	270 1/2W	270 1/2W
4 TRK STEREO 1/4"	STEREO	.002	.002	220, 1W	220, 1W

A

200625C

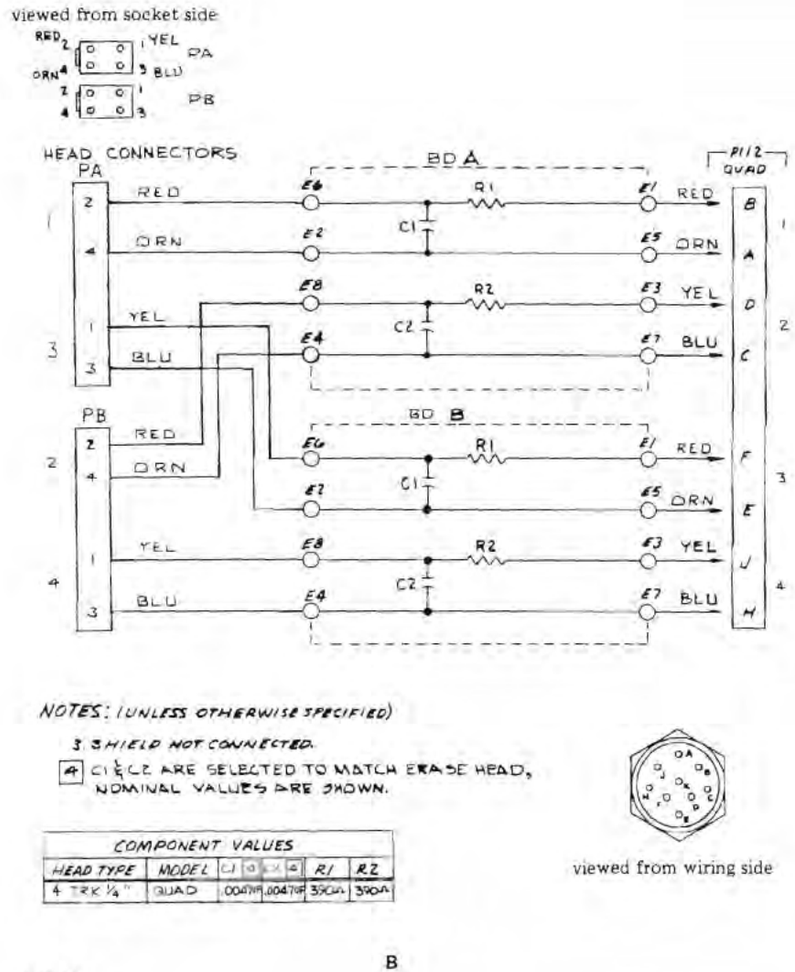

COMPONENT VALUES					
HEAD TYPE	MODEL	C1 3	C2 4	R1	R2
4 TRK 1/4"	QUAD	.0047μF	.0047μF	390Ω	390Ω

B

202349C

Figure 8-9. Erase Head Matching Board Schematic Diagram

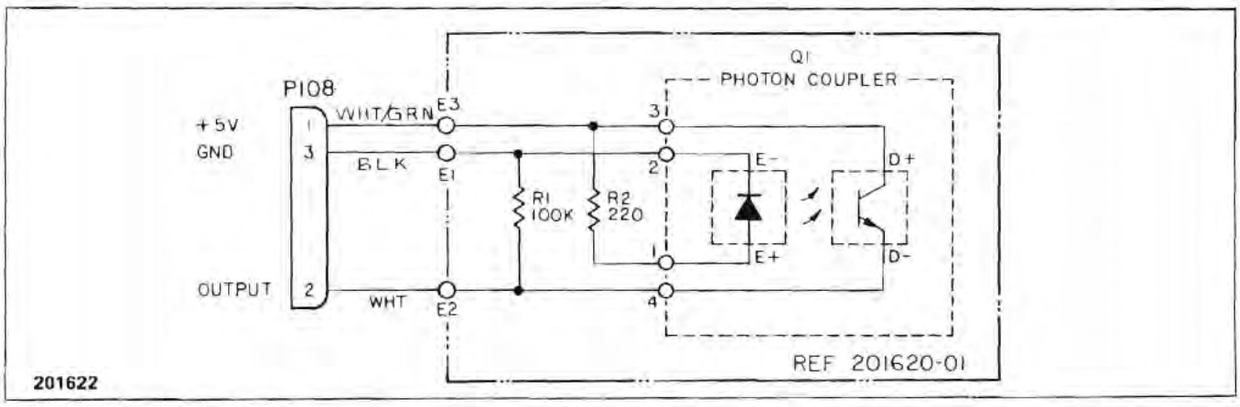

Figure 8-10. Motion Direction Sensor PWA

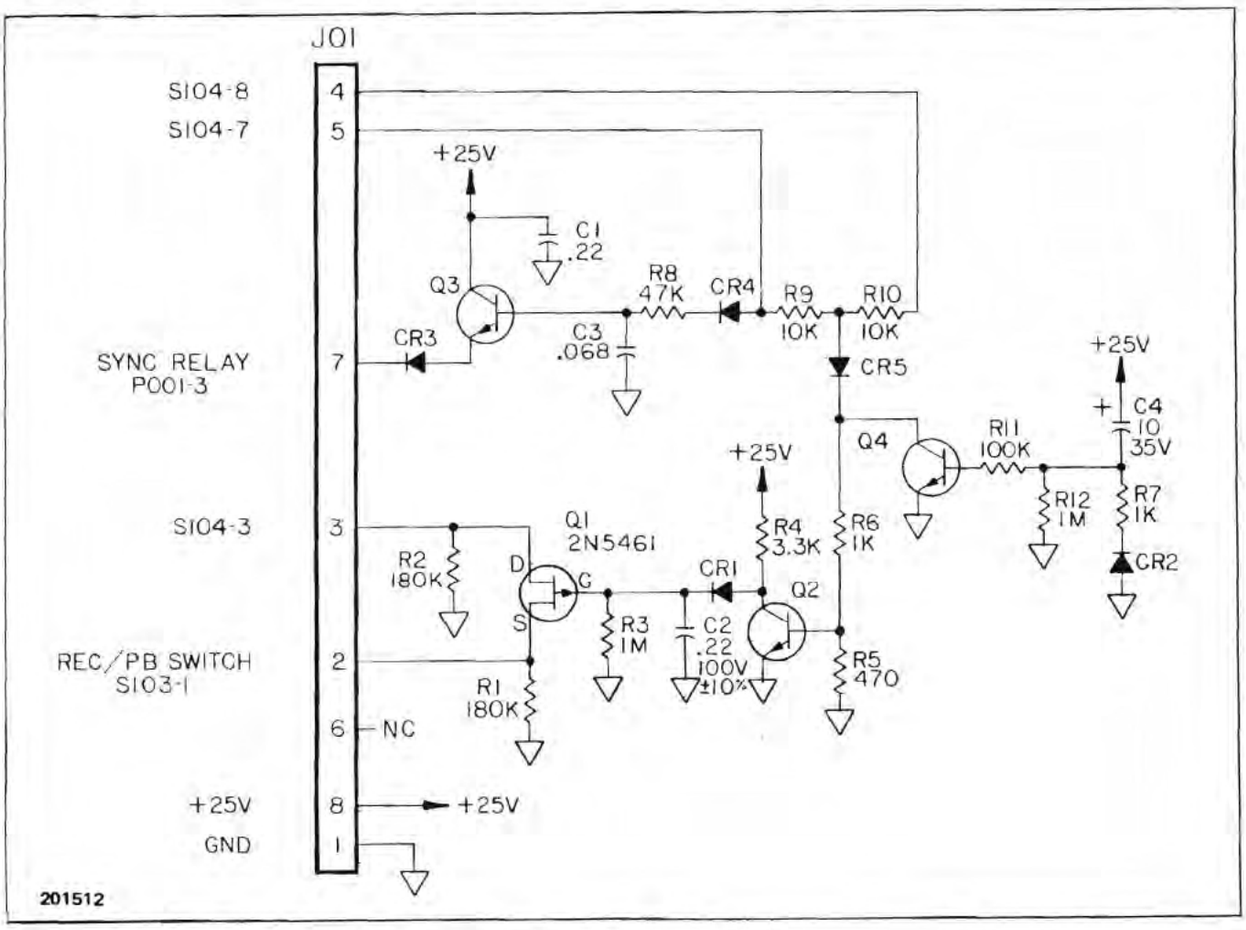

Figure 8-11. Squelch PWA

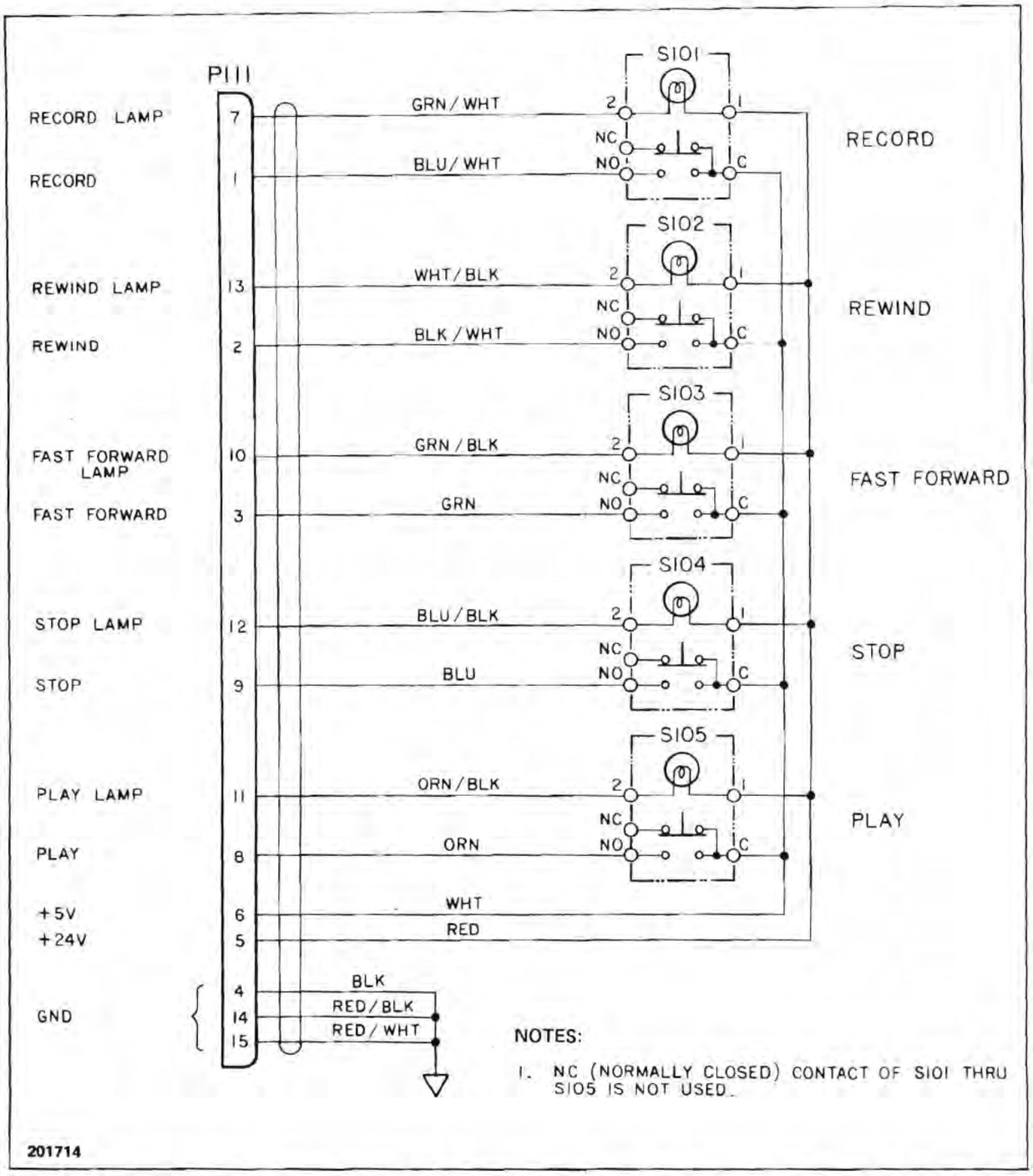

Figure 8-12. Remote Control

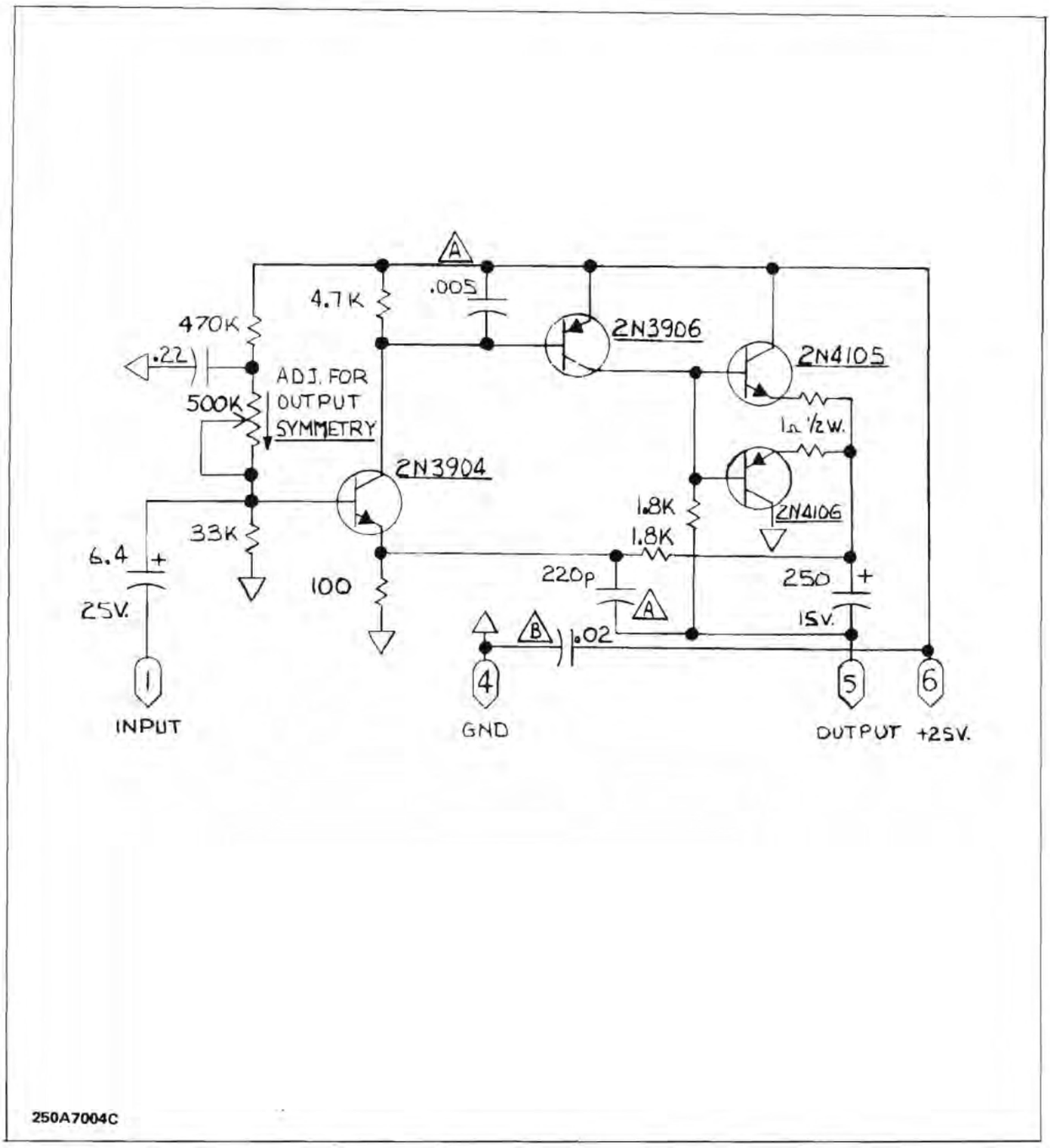

Figure 8-13. Line Amplifier PWA, Monitor and Speaker Assembly, Schematic Diagram

Table 8-1. Schematic Diagrams and Parts List

FIG. & REF.	QUANTITY PER ASSEMBLY						DESCRIPTION	PART NO.	MFR. PART NO.	CODE IDENT. NO.
	-19	-20	-21	-22	-23	-24				
8-14†	1	-	-	-	-	-	Model 280B-FT Recorder/ Reproducer, final assy	200850-19		
	-	1	-	-	-	-	Model 280B-2 Recorder/ Reproducer, final assy	200850-20		
	-	-	1	-	-	-	Model 280B-4 Recorder/ Reproducer, final assy	200850-21		
	-	-	-	1	-	-	Model 280B-1 Recorder/ Reproducer, final assy	200850-22		
	-	-	-	-	1	-	Model 280B-24 Recorder/ Reproducer, final assy	200850-23		
	-	-	-	-	-	1	Model 280B-44 Recorder/ Reproducer, final assy	200850-24		
	1	-	-	-	-	-	Transport assy, mono, FT, 0.25 (see Fig. 8-15 for bkdwn)	202690-01		
	-	1	-	1	-	-	Transport assy, 2 trk, mono 1/2 trk, 0.25 (see Fig. 8-15 for bkdwn)	202690-02		
	-	-	1	-	-	-	Transport assy, 4 trk, 0.50 (see Fig. 8-15 for bkdwn)	202690-03		
	-	-	-	-	1	-	Transport assy, stereo, 1/4 trk, 0.25 (see Fig. 8-15 fo for bkdwn)	202690-04		
	-	-	-	-	-	1	Transport assy, 4 trk, 0.25 (see Fig. 8-15 for bkdwn)	202690-05		
	1	-	-	-	-	-	Electronics assy, chan 1, FT (see Fig. 8-50 for bkdwn)	200576-01		
	-	1	1	-	1	1	Electronics assy, chan 1 and 2 (see Fig. 8-50 for bkdwn)	200576-02		
	-	-	1	-	-	1	Electronics assy, chan 3 and 4 (see Fig. 8-51 for bkdwn)	201740-01		
	-	-	-	1	-	-	Electronics assy, chan 1, 1/2 trk (see Fig. 8-50 for bkdwn)	200576-04		
	1	1	1	1	1	1	Cable assy, pwr and logic, intcon	200673-01		
P126	1	1	1	1	1	1	. Conn, rcpt, 9 hole	160004	1625-9R	27264
P109	1	1	1	1	1	1	. Conn, plug, 12 hole	160039	1625-12P	27264
							†This Fig. not illustrated.			

Table 8-1. Schematic Diagrams and Parts List

FIG. & REF.	QUANTITY PER ASSEMBLY -19	-20	-21	-22	-23	-24	DESCRIPTION	PART NO.	MFR. PART NO.	CODE IDENT. NO.
8-14							Model 280B final assy (continued)	200850-		
Ref P126	7	7	7	7	7	7	. Term, pin, 0.062 dia, female, 18-22 ga	160029	1561	27264
Ref P109	7	7	7	7	7	7	. Term, pin, 0.062 dia, male, 18-22 ga	160028	1560	27264
	-	-	1	-	-	1	Cable assy, pwr and logic, transfer	200843-01		
	-	-	2	-	-	2	. Conn, plug, 9 hole	160003	1625-9P	27264
	-	-	18	-	-	18	. Term, pin, 0.062 dia, male, 18-22 ga	160028	1560	27264
	-	-	2	-	-	2	. Cable tie, nylon	162198	SSTIM-MP	06383
	1	1	1	1	1	1	Allen wrench kit	112150		
	4	4	8	4	4	8	Screw, pnh, 10-32x3/8	110091		
	8	8	8	8	8	8	Screw, ovh, 10-32x5/8	110283		
	8	8	8	8	8	8	Washer, #10, "CA" padded, brass	111104	N/P C1812	73484
	1	1	-	1	1	1	Reel, 10.5, metal, empty, 0.25	112171	RB-1/4x10-1/2	66346
	-	-	1	-	-	-	Reel, 10.5, metal, empty, 0.50	112172	RB-1/2x10-1/2	66346
	1	1	-	1	1	-	Console assy, mono/stereo* (see Fig. 7-62 for bkdwn)	200600-03		
	-	-	1	-	-	1	Console assy, quad* (see Fig. 8-62 for bkdwn)	200600-04		
	-	1	-	-	1	-	Head bridge assy, stereo, 2 trk, DIN* (see Fig. 8-24 for bkdwn)	200580-06		
	-	1	-	-	1	-	Conversion kit, stereo to quad* (see Fig. 8-63 for bkdwn)	200962-02		
	-	-	-	1	-	-	Conversion kit, mono 1/2 trk to stereo* (see Fig. 8-65 for bkdwn)	200959-01		
	(1)	(1)	(1)	(1)	(1)	(1)	Remote control assy, panel mount** (see Fig. 8-66 for bkdwn)	200925-04		

*Accessory or option

**Select one

+This Fig. not illustrated.

FIG. & REF.	QUANTITY PER ASSEMBLY -19	-20	-21	-22	-23	-24	DESCRIPTION	PART NO.	MFR. PART NO.	CODE IDENT. NO.
8-14†							Model 280B final assy (continued)	200850-		
	(1)	(1)	(1)	(1)	(1)	(1)	Remote control assy, table mount** (see Fig. 8-66 for bkdwn)	200925-03		
	-	1	-	-	1	-	Conversion kit, stereo to FT mono* (see Fig. 8-67 for bkdwn)	201285-01		
	1	1	1	1	1	1	Conn, plug, 15-hole	160040	1625-15P	27264
	15	15	15	15	15	15	Term, pin, 0.062 dia, male, 22 ga	160030	1854	27264
	1	1	1	1	1	1	Cable tie mount, adhesive back	162228	ABMS-AD	06383
	1	1	1	1	1	1	Cable tie, nylon	162297		
	1	1	-	1	1	1	Tape splicer, 0.25*	183019	TS8D	02773
	-	-	1	-	-	-	Tape splicer, 0.50*	183020	TSV50	02773
	1	1	1	1	1	1	Head demagnetizer*	183017	30112-2J50	72653
	1	1	1	1	1	1	Head cleaning pads*	183018	22-9000	09071
	1	-	-	1	-	-	Monitor speaker panel assy* (see Fig. 8-68 for bkdwn)	201499-01		
	1	-	-	-	-	-	Conversion kit, FT mono to stereo* (see Fig. 8-65 for bkdwn)	200959-02		
	1	1	1	1	1	1	Varisync accessory, console	201664-01		
	1	1	1	1	1	1	Varisync accessory, remote	201664-02		

*Accessory or option

**Select one

†This Figure not illustrated.

Table 8-1. Schematic Diagrams and Parts List

FIG. & REF.	QUANTITY PER ASSEMBLY -01	-02	-03	-04	-05		DESCRIPTION	PART NO.	MFR. PART NO.	CODE IDENT. NO.
8-15	Ref	-	-	-	-		Transport assy, FT, 0.25 (see Fig. 8-14 for NHA)	202690-01		
	-	Ref	-	-	-		Transport assy, 1 & 2 trk, 0.25 (see Fig. 8-15 for NHA)	202690-02		
	-	-	Ref	-	-		Transport assy, quad 4 trk, 0.50 (see Fig. 8-14 for NHA)	202690-03		
	-	-	-	Ref	-		Transport assy, stereo 4 trk, 0.25 (see Fig. 8-14 for NHA)	202690-04		
	-	-	-	-	Ref		Transport assy, quad 4 trk, 0.25 (see Fig. 8-14 for NHA)	202690-05		
1	1	1	1	1	1		Transport subassy, std (see Fig 8-16 for bkdwn)	202689-01		
3	1	1	1	1	1		Standard head cover	502010001-02		
6	1	1	-	1	-		Intcon cable assy, mono/ stereo (see Fig. 8-17 for bkdwn)	200568-02		
7	-	-	1	-	1		Intcon cable assy, quad (see Fig. 8-17 for bkdwn)	200568-03		
9	1	1	1	1	1		Screw, flh, 6-32 x 1/4	110020		
10	1	1	1	1	1		Screw, set, cup pt, 6-32 x 1/8	110136		
11	1	1	1	1	1		Tape break switch assy (see Fig 8-18 for bkdwn)	200547-01		
12	1	1	-	1	1		Dancer assy, 1/4" (see Fig. 8-22 for bkdwn)	202692-01		
13	-	-	1	-	-		Dancer assy, 1/2" (see Fig 8-22 for bkdwn)	202692-02		
14	1	1	1	1	1		Adhesive, pressure sensitive	201731-01		
15	1	1	1	1	1		Bezel, capstan	201431-02		
17*	(1)	(1)	(1)	(1)	(1)		Transport control chassis assy, 60 Hz (see Fig. 8-19 for bkdwn)	202671-01		
18*	(1)	(1)	(1)	(1)	(1)		Transport control chassis assy, 50 Hz (see Fig. 8-19 for bkdwn)	202671-02		
20	1	1	1	1	1		Screw, btnhd, 8-32 x 3/8	110211		
							*Select one			

Table 8-1. Schematic Diagrams and Parts List

FIG. & REF.	QUANTITY PER ASSEMBLY -01	-02	-03	-04	-05		DESCRIPTION	PART NO.	MFR. PART NO.	CODE IDENT. NO.
8-15							Transport assy (continued)			
21**	(1)	(1)	(1)	(1)	(1)		Capstan servo instl kit, console (see servo supplement)	202283-08		
22**	(1)	(1)	(1)	(1)	(1)		Capstan servo instl kit, rack (see servo supplement)	202283-09		
23*	(1)	(1)	(1)	(1)	(1)		Capstan motor kit, 7.5 - 15.0 ins, 60 Hz (see Fig. 8-20 for bkdwn)	201739-02		
24*	(1)	(1)	(1)	(1)	(1)		Capstan motor kit, 7.5 - 15.0 ins, 50 Hz (see Fig. 8-20 for bkdwn)	201739-04		
25*	(1)	(1)	-	(1)	(1)		Capstan motor kit, 3.75 - 7.5 ins, 60 Hz (see Fig. 8-20 for bkdwn)	201739-01		
26*	(1)	(1)	-	(1)	(1)		Capstan motor kit, 3.75 - 7.5 ins, 50 Hz (see Fig. 8-20 for bkdwn)	201739-03		
27	1	1	-	1	1		Pinch roller assy, 0.25 tape (see Fig. 8-21 for bkdwn)	201543-01		
28	-	-	1	-	-		Pinch roller assy, 0.50 tape (see Fig. 8-21 for bkdwn)	201543-02		
31	1	1	-	1	1		Tape break arm assy, 0.25 tape (see Fig. 8-23 for bkdwn)	200709-01		
32	-	-	1	-	-		Tape break arm assy, 0.50 tape (see Fig. 8-23 for bkdwn)	200709-02		
34	1	-	-	-	-		Head bridge assy, mono, FT, 0.25" (see Fig. 8-24 for bkdwn)	202712-01		
35	-	1	-	-	-		Head bridge assy, mono 1/2 trk/stereo 2 trk, 0.25" (see Fig. 8-24 for bkdwn)	202712-02		
36	-	-	-	1	-		Head bridge assy, 1/4 trk, 0.25" (see Fig. 8-24 for bkdwn)	202712-03		
37	-	-	-	-	1		Head bridge assy, 4 trk, 0.25" (see Fig. 8-24 for bkdwn)	202712-04		
							*Select one **Accessory			

Table 8-1. Schematic Diagrams and Parts List

FIG. & REF.	QUANTITY PER ASSEMBLY -01	-02	-03	-04	-05		DESCRIPTION	PART NO.	MFR. PART NO.	CODE IDENT. NO.
8-15							Transport assy (continued)	202690		
38	-	-	1	-	-		Head bridge assy, 4 trk, 0.50" (see Fig. 8-24 for bkdwn)	202712-05		
39	2	2	2	2	2		Knob, commercial, reel hold-down	162439		
40	2	2	2	2	2		Hub, reel centering	162441		
41	1	1	1	1	1		Cover, tension sensor	202506-01		
42	3	3	3	3	3		Screw, btnhd, 10-32 x 5/8	110129		
43	2	2	2	2	2		Screw, btnhd, 8-32 x 1/4	110381		
44	3	3	3	3	3		Screw, flh, 8132 x 1/2	110032		
45	4	4	4	4	4		Screw, ovh, 6-32 x 3/4	110375		
46	2	2	2	2	2		Screw, pnh, 6-32 x 1/4	110070		
47	4	4	4	4	4		Screw, pnh, 6-32 x 1/2	110175		
49	6	6	6	6	6		Lockwasher, int t, no. 6	111023		
53	2	2	2	2	2		Screw, pnh, 6-32 x 5/8	110242		
58	4	4	4	4	4		Knob, 11/16 x 13/32	162162	DC7N2B	23480
59	2	2	2	2	2		Lcokwasher, int t, no. 8	111024		
61	1	1	1	1	1		Spacer,sensor mtg	202591-01		
64	2	2	2	2	2		Screw, pnh, 8-32 x 1/2	110165		
67	3	3	3	3	3		Cable tie, nylon 1621981	162198	SSTIM-MP06383	
68	2	2	2	2	2		Cable tie mount, adhesive back	162228	ABMS-AD	06383
74	1	1	1	1	1		Panel assy, front dress, std	202661-01		
	1	1	1	1	1		· Panel, front dress	200584-01		
	1	1	1	1	1		· Bezel, rcd button	502010006		
75	1	1	1	1	1		Panel assy, front dress, std, pitch control	202665-01		
76	1	1	1	1	1		Panel assy, front dress, rack mounted, pitch control	202665-02		
77	ar	ar	ar	ar	ar		Adhesive	162080		
78	1	1	1	1	1		Rod, adj spring	202537-01		
79	1	1	-	1	1		Guide, funnel, 1/4"	201723-01		
80	-	-	1	-	-		Guide, funnel 1/2"	201723-02		

Table 8-1. Schematic Diagrams and Parts List

FIG. & REF.	QUANTITY PER ASSEMBLY -01	-02	-03	-04	-05		DESCRIPTION	PART NO.	MFR. PART NO.	CODE IDENT. NO.
8-15							Transport assy (continued)	202690		
82	1	1	-	1	1		Screw, btnhd, 10-32 x 1/2	110128		
83	-	-	1	-	-		Screw, btnhd, 10-32 x 3/4	110130		
85	1	1	1	1	1		Housing cap, dancer	201824-01		
86	2	2	2	2	2		Screw, btnhd, 8-32 x 1-1/4	110381		
87	1	1	1	1	1		Brkt, airpot mtg	201841-01		
88	1	1	1	1	1		Bellcrank	201923-01		
89	2	2	2	2	2		Screw, btnhd, 8-32 x 1/2	110353		
90	1	1	1	1	1		Spring, extension, dancer	202138-01		
91	1	1	1	1	1		Brkt, sensor mtg	202490-01		
92	1	1	1	1	1		Light sensor assy (see Fig. 8-71 for bkdwn)	202505-01		
93	1	1	1	1	1		Tension sensor PWA (see Fig. 8-70 for bkdwn)	202499-01		
94	1	1	1	1	1		Screw, pnh, 6-32 x 1/4	110070		
95	1	1	1	1	1		Washer, flat, #6, SST	111003		
96	2	2	2	2	2		Nut, hex, 4-40	111052		
97	1	1	1	1	1		Airpot, modified	202016-01		
98	3	3	3	3	3		Nut, hex, 8-32	111054		
99	2	2	2	2	2		Washer, lock, ext t, #8	111034		

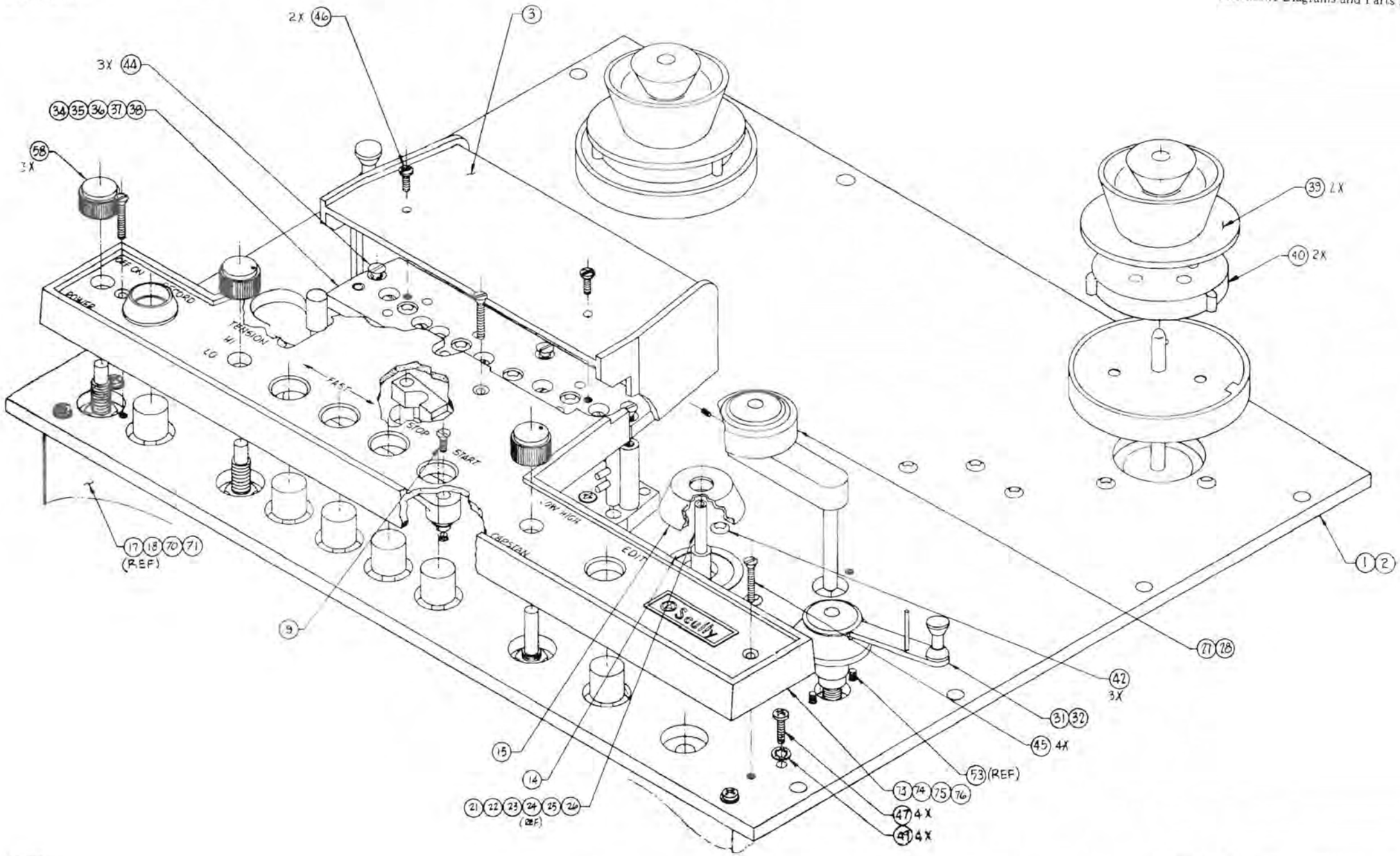

202690A

Figure 8-15. Transport Assembly (1 of 2)

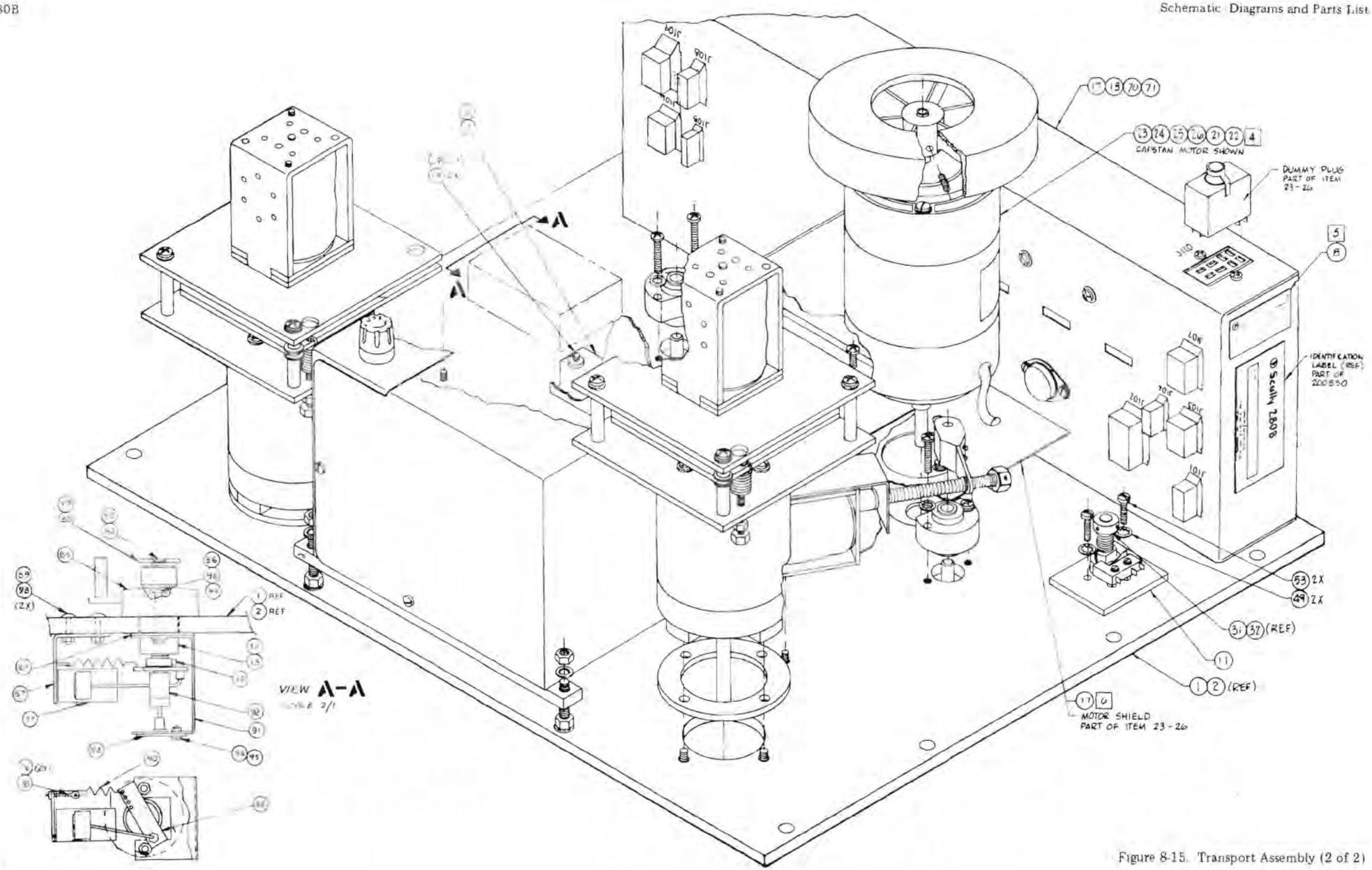

202690A

Figure 8-15. Transport Assembly (2 of 2)

Table 8-1. Schematic Diagrams and Parts List

FIG. & REF.	QUANTITY PER ASSEMBLY -01						DESCRIPTION	PART NO.	MFR. PART NO.	CODE IDENT. NO.
8-16	Ref						Transport subassy (see Fig. 8-15 for NHA)	202689-01		
1	1						Deck plate, std	202597-01		
2	2						Housing assy, pinch roller and ATL (parts not sold separately)	200562		
3	1						Pinch roller connecting rod assy (see Fig. 8-25 for bkdwn)	200560-01		
4	1						ATL solenoid assy (see Fig. 8-26 for bkdwn)	202691-01		
5	1						Power supply assy (see Fig. 8-27 for bkdwn)	202688-01		
6	1						Torque motor & brake assy (supply) (see Fig. 8-28 for bkdwn)	201693-01		
7	1						Torque motor & brake assy (takeup) (see Fig. 8-29 for bkdwn)	201713-01		
9	1						ATL linkage assy (see Fig. 8-30 for bkdwn)	502010400-11		
10	1						Head platform base plate assy	502010400-51		
	1						. Head, base plate	508010402-01		
	3						. Standoff, head bridge	502010202		
	3						. Setscrew, ovp, 8-32 x 1/2	110103		
11	1						Arm assy, pinch roller	201546-01		
	1						. Arm, pinch roller	201545-01		
	1						. Shaft, act, arm pinch roller	502050400-04		
	1						. Setscrew, ovp, 8-32 x 3/16	110109		
12	2						Reel, platform assy (see Fig. 8-31 for bkdwn)	502060600		
14	1						Shield, sub head	200601-01		
15	8						Screw, btnhd, 10-32 x 3/4	110130		
16	4						Screw, btnhd, 8-32 x 3/8	110211		
17	3						Screw, flh, 8-32 x 1/2	110212		

Table 8-1. Schematic Diagrams and Parts List

FIG. & REF.	QUANTITY PER ASSEMBLY -01						DESCRIPTION	PART NO.	MFR. PART NO.	CODE IDENT. NO.
8-16							Transport subassy (cont'd)	202689-		
18	5						Lockwasher, int t, #6	111023		
19	8						Nut, hex, 10-32 x 5/16	111123		
20	8						Lockwasher, int t, #10	111025		
21	1						Spacer, brass, 1/4 od, 6-32 x 0.375	112058	2121	83330
22	2						Torque spacer	502060002		
23	4						Screw, pnh, 6-32 x 3/4	110180		
24	1						Washer, flat, nylon	111131	NW25-6874	95987
25	4						Screw, btnhd, 10-32 x 1.00	110132		
26	1						Screw, pnh, 6-32 x 1/2	110175		

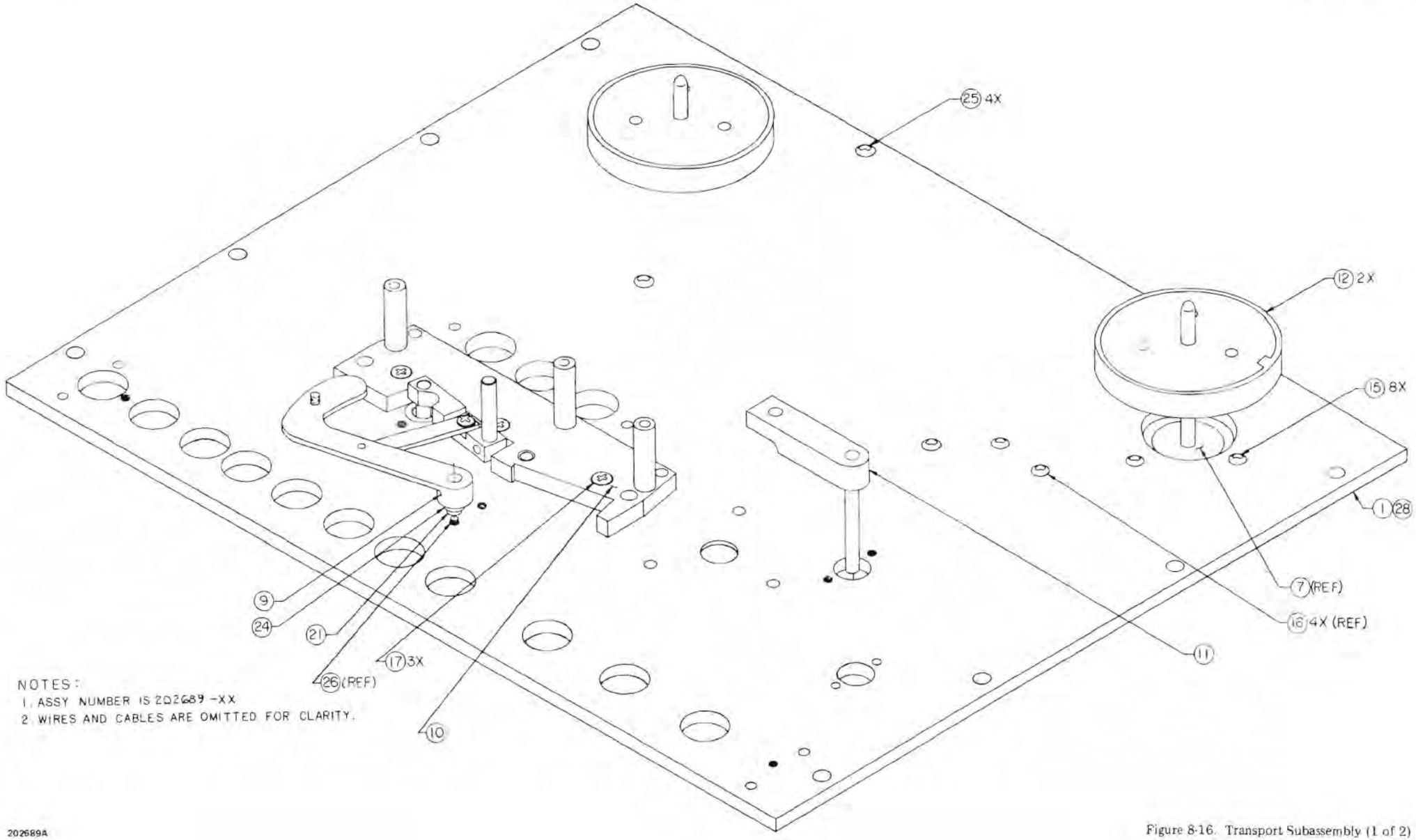

Figure 8-16. Transport Subassembly (1 of 2)

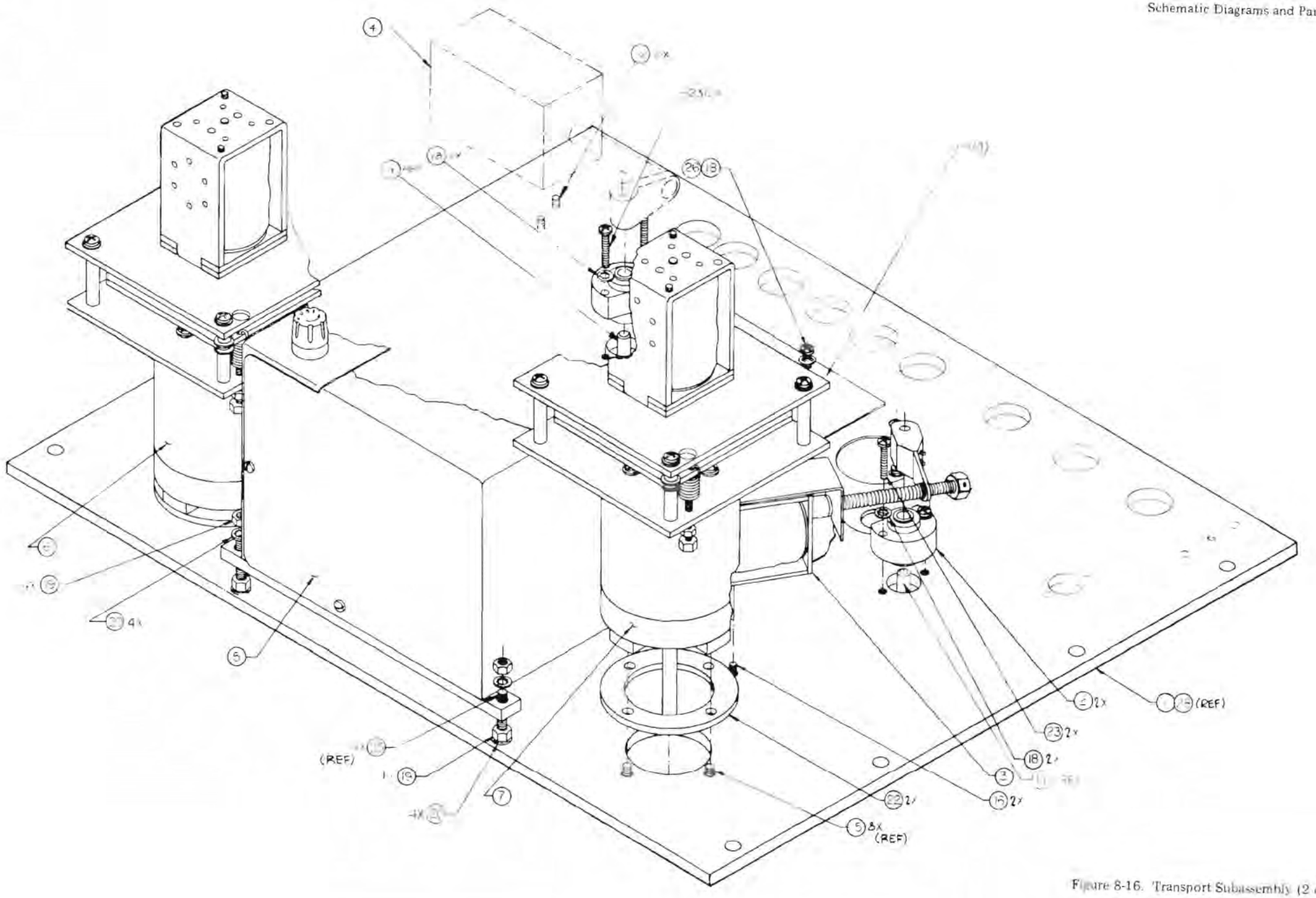

202689A

Figure 8-16. Transport Subassembly (2 of 2)

Table 8-1. Schematic Diagrams and Parts List

FIG. & REF.	QUANTITY PER ASSEMBLY -02	-03					DESCRIPTION	PART NO.	MFR. PART NO.	CODE IDENT. NO.
8-17	Ref	-					Intcon cable assy, mono & stereo (see Fig. 8-15 for NHA)	200568-02		
	-	Ref					Intcon cable assy, quad (see Figs. 8-14 and 8-5) for NHA)	200568-03		
1	1	1					Bracket, intcon cable	200948-01		
	6	6					. Nut, plug, 8-32 x 0.050	111087		
2 J112-J114	3	3					Skt, 9-pin, female	160089	126-221	02660
4	2	2					Lug, solder, int lock, #8	162075		
5	-	2					Clamp, 5/8 id, nylon	112168	779	51705
6	2	-					Clamp, 3/8 id, nylon	112111	835	51705
8	2	2					Screw, pnh, 8-32 x 0.38	110171		
9	2	2					Screw, pnh, 8-32 x 0.25	110168		
11	2	2					Lockwasher, int t, #8	111026		
12	2	2					Washer, flat, #8	111006		
16 J-125A, J125B	1	2					Conn, plug, 25-pin	160030	DBM25P	71785
18	1	2					Slide lock retainer, 25-pin conn	160139	DB51221-1	71785
20 Ref J-125A, J-125B	1	2					Conn cover, deep straight clamp, 25 pin conn	160141	DB24659	71785

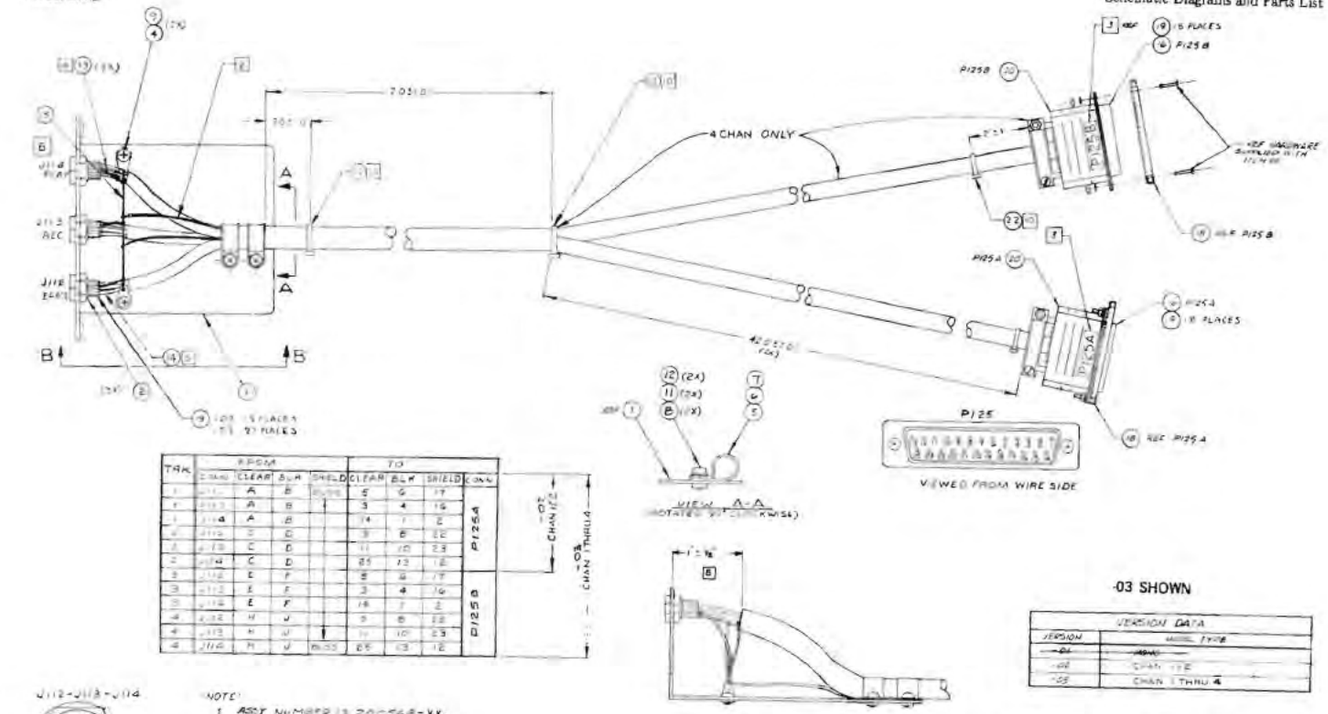

Figure 8-17. Interconnecting Cable Assembly

Table 8-1. Schematic Diagrams and Parts List

FIG. & REF.	QUANTITY PER ASSEMBLY -01						DESCRIPTION	PART NO.	MFR. PART NO.	CODE IDENT. NO.
8-18	Ref						Tape break switch assy (see Fig. 8-15 for NHA)	200547-01		
1	1						Plate, tape break switch	200551		
2	2						Screw, pnh, 2-56 x 5/8	110169		
3	2						Washer, flat, #2	111001		
4	2						Term pin, 0.062 dia, female, 18-22 AWG	160029	1561	27264
5	1						Conn, rcpt, 3-hole	160045	1625-3RI	27264
9	1						Switch, 5A, hi-lever ratio	162172	E61-50H	01963
10	2						Spacer, brass, 1/4 od x 0.25, #4	112011	2340	83330
11	2						Lockwasher, int t, #2	111021		

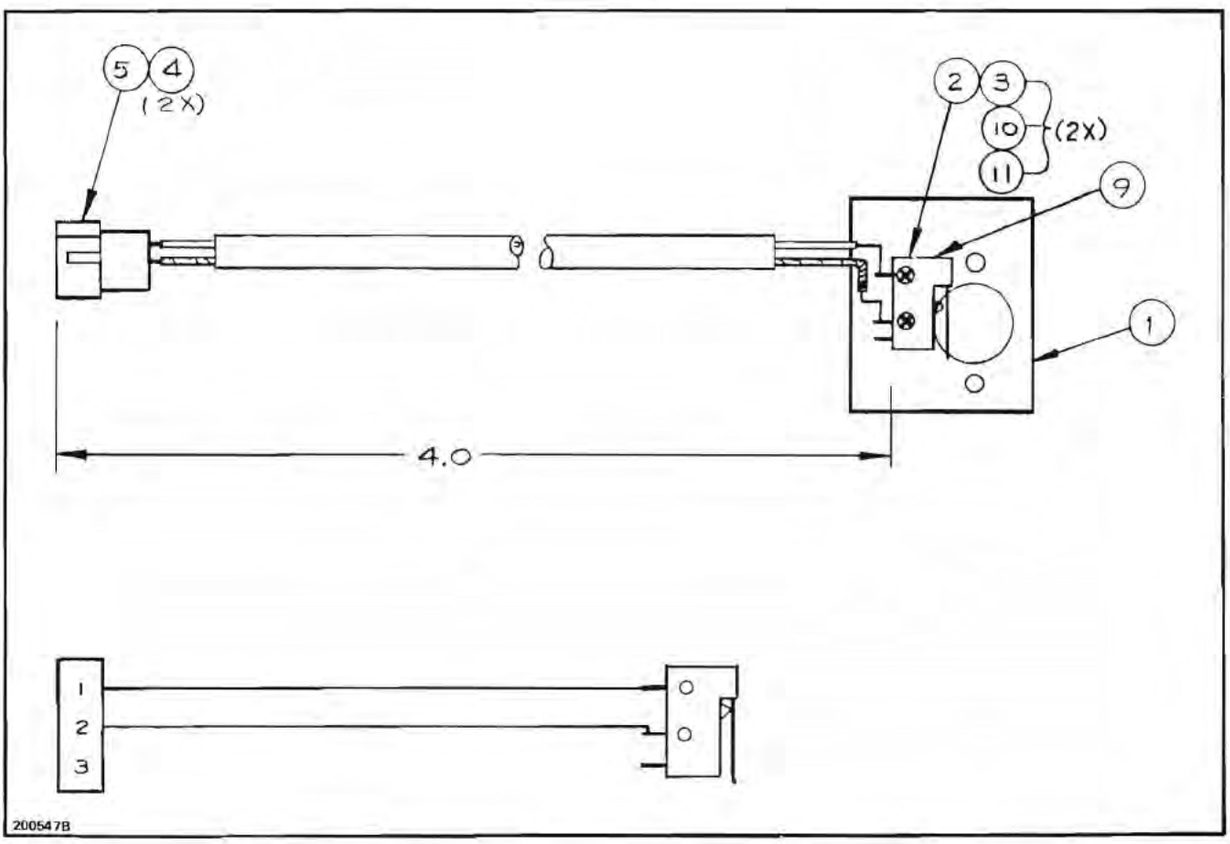

Figure 8-18. Tape Break Switch Assembly

Table 8-1. Schematic Diagrams and Parts List

FIG. & REF.	QUANTITY PER ASSEMBLY -01	-02					DESCRIPTION	PART NO.	MFR. PART NO.	CODE IDENT. NO.
8-19	Ref	-					Transport control chassis assy, 60 Hz (see Fig. 8-15 for NHA)	202671-01		
	-	Ref					Transport control chassis assy, 50 Hz (see Fig. 8-15 for NHA)	202671-02		
2	1	1					Transport logic PWA (see Fig. 8-32 for bkdwn)	202781-01		
4	1	1					Bracket, cap	200461-01		
5	1	1					Cover, relay control chassis	200869-01		
6	1	1					Switch plate assy (see Fig. 8-33 for bkdwn)	202670-01		
7 TB-101 thru TB103	3	3					Solder lug, 2 point	162222	863	83330
8	4	4					Lockwasher, int t, #6	111023		
9 J110	1	1					Conn, female, 8 soc	160052	S-3308-AB	13150
11	2	2					Washer, flat, #6	111003		
12	5	5					Nut, kep, ext lockwasher, 6-32	111063		
13	2	2					Cable tie mount, adhesive back	162228	ABMS-AD	06383
14	17	17					Screw, pnh, 6-32 x 1/4	110174		
15	5	5					Spacer, 6-32 unc x 0.75	112055		
16	2	2					Screw, pnh, 6-32 x 0.50	110175		
17	2	2					Screw, pnh, 6-32 x 1-7/8	110201		
18 U101	1	1					IC, linear voltage amp	154001	LM309K	12040
C101, C102	2	2					Cap, 4 μF, 370 Vac	151016	45F272	03508
21 XU-101	1	1					Skt, xstr, raised boss	152064	8080-1G3	91506

Table 8-1. Schematic Diagrams and Parts List

FIG. & REF.	QUANTITY PER ASSEMBLY -01	-02					DESCRIPTION	PART NO.	MFR. PART NO.	CODE IDENT. NO.
8-19							Transport control chassis assy (continued)	202671		
29	A/R	A/R					Clear silicone heatsink compound	162241	732-RTV	71984
31	1	1					Harness assy, xport cont logic (see Fig. 8-24 for bkdwn)	201711-01		
32	1	1					Harness assy, xport cont pwr (see Fig. 8-25 for bkdwn)	202669-01		
33	2	2					Cable tie, nylon	162310	85831	06383
30	1	1					Tie strip, 1 pt	162097	51-B	71785

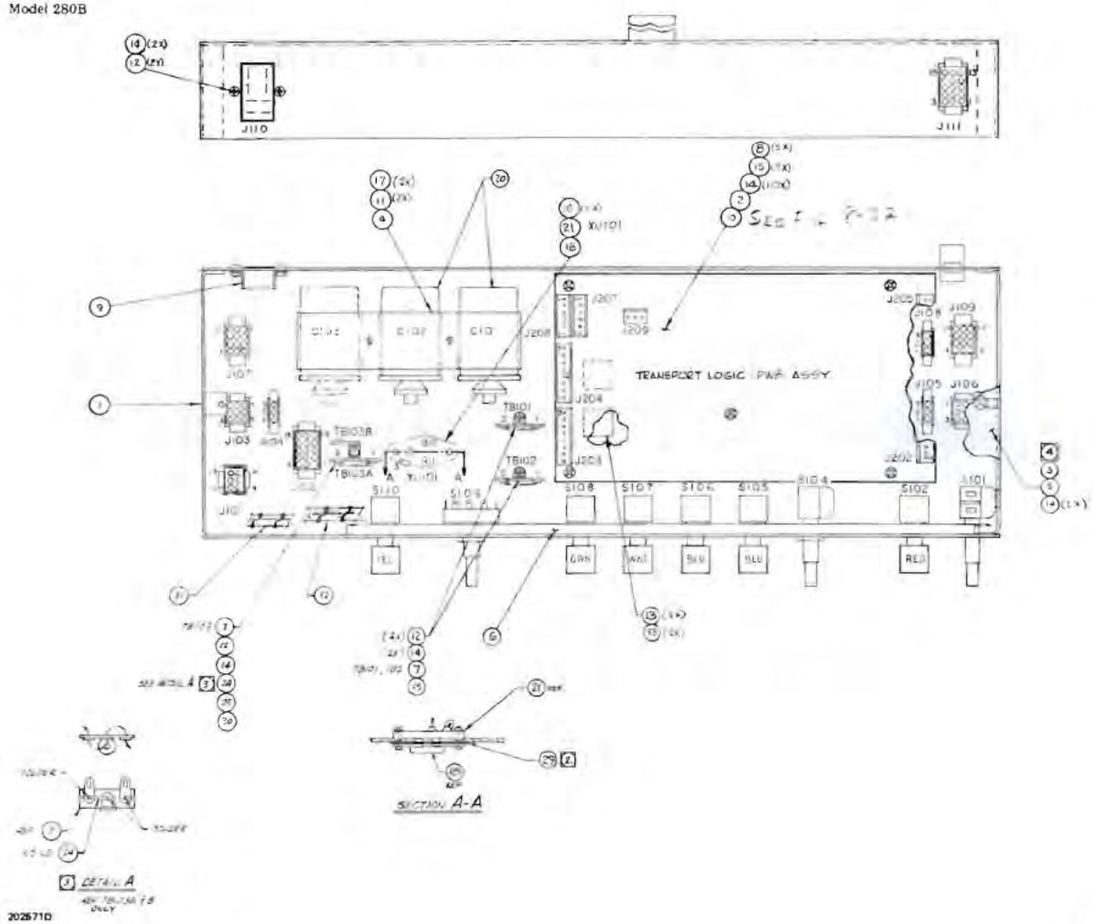

DATA TABLE	
SYMBOL	DESCRIPTION
-01	[illegible]
-02	[illegible]

NOTES:

1. ASSEMBLY NUMBER IS 202671 - XX.
2. USE SMALL AMOUNT OF CLEAR SILICONE HEATSINK COMPOUND ITEM 29 ON TRANSISTOR ITEM 16.
3. MODIFY ITEM 7 (SOLDER LUG, 2 PINC) BY REMOVING ITEM 24 (NUT, SPLC 20MA) THRU RIVET HOLES OF ITEM 7 AND SCREWS (2X) AS SHOWN IN DETAIL A. USE TO STA TB103B. ITEM 30 (TIE STRIP, 1 PNT) TO BE MODIFIED BY SOLDERING ITEM 14 (NUT, SPLC 20MA) .32 LG. THRU RIVET HOLES OF ITEM 30, SIMILAR TO TB103A.
4. APPLY LABEL TO COVER.

Figure 8-19. Transport Control Chassis Assembly

FIG. & REF.	QUANTITY PER ASSEMBLY -01	-02	-03	-04			DESCRIPTION	PART NO.	MFR. PART NO.	CODE IDENT. NO.
8-20	Ref	-	-	-			Capstan motor kit, 3.75 - 7.50, 60 Hz (see Fig. 8-15 for NHA)	201739-01		
	-	Ref	-	-			Capstan motor kit, 7.50 - 15.0, 60 Hz (see Fig. 8-15 for NHA)	201739-02		
	-	-	Ref	-			Capstan motor kit, 3.75 - 7.50, 50 Hz (see Fig. 8-15 for NHA)	201739-03		
	-	-	-	Ref			Capstan motor kit, 7.50 - 15.0, 50 Hz (see Fig. 8-15 for NHA)	201739-04		
1	1	-	-	-			Capstan motor assy, 3.75 - 7.50, 60 Hz (see Fig. 8-36 for bkdwn)	200563-01		
2	-	1	-	-			Capstan motor assy, 7.50 - 15.0, 60 Hz (see Fig. 8-36 for bkdwn)	200563-02		
3	-	-	1	-			Capstan motor assy, 3.75 - 7.50, 50 Hz (see Fig. 8-36 for bkdwn)	200563-03		
4	-	-	-	1			Capstan motor assy, 7.50 - 15.0, 50 Hz (see Fig. 8-36 for bkdwn)	200563-04		
5	1	-	1	-			Flywheel, machined	200290-02		
6	1	1	1	1			Shield, capstan motor	200459-02		
8	-	1	-	1			Flywheel, machined	200290-03		
9	1	1	1	1			Setscrew, ovp, Allen hd, 10-32 x 1/2	110162		
10	1	1	1	1			Dummy plug assy, inverter	202376-01		
P110	1	1	1	1			Conn, plug, 8-pin, male with cover	160860	01-1108-104-004-104	83486
11	1	1	1	1			Cable tie, nylon	162198		
12	1	1	1	1			Cable tie mount, adhesive back	162228	ABMS-AD	06383
C103 Ref	1	-	1	-			Cap, ac, paper-oil, 4.0 µF, 370 Vac	151016	45F272	03508
C103 Ref	-	1	-	1			Cap, ac, paper-oil, 5.0 µF, 370 Vac	151008	45F273	03508

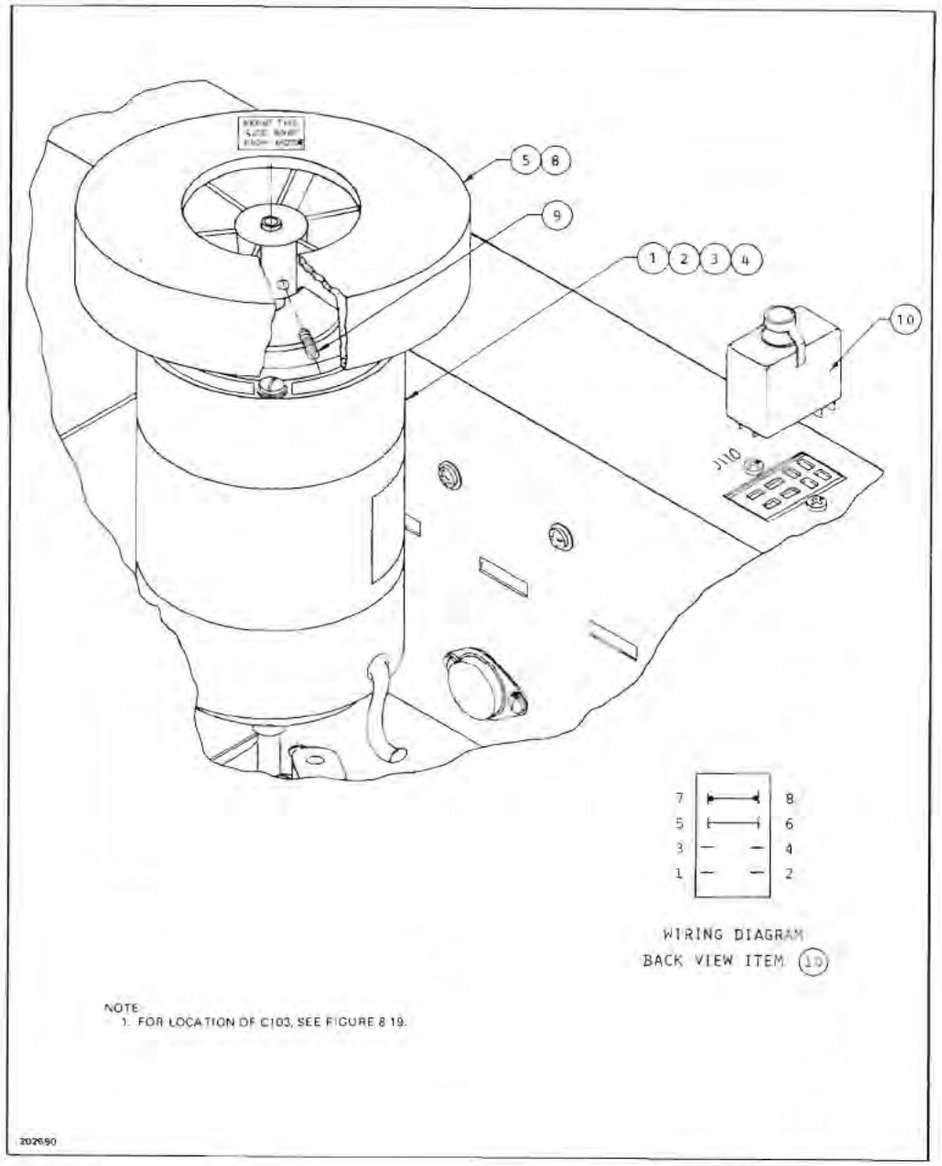

Figure 8-20. Capstan Motor Kit

FIG. & REF.	QUANTITY PER ASSEMBLY -01	-02					DESCRIPTION	PART NO.	MFR. PART NO.	CODE IDENT. NO.
8-21	Ref	-					Pinch roller assy, 0.25 tape (see Fig. 8-15 for NHA)	201543-01		
	-	Ref					Pinch roller assy, 0.50 tape (see Fig. 8-15 and 8-64 for NHA)	201543-02		
1	1	-					Roller assy, 0.25 tape	201544-01		
	1	-					. Hub assy, pinch roller, 0.25 tape	201449-01		
	1	-					. Bearing, rdl, 0.250 id x 0.625 od x 0.196 w	112004	R4ZZR	50294
	2	-					. Retaining ring	112099	500E-62	79136
2	-	1					Roller assy, 0.50 tape	201544-02		
	-	1					. Hub assy, pinch roller, 0.50 tape	201449-02		
	-	1					. Bearing, rdl, 0.250 id x 0.625 od x 0.196 w	112004	R4ZZR	50294
	-	2					. Retaining ring	112099	500E-62	79136
3	1	-					Shaft, pinch roller, 0.250 tape	201669-01		
4	-	1					Shaft, pinch roller, 0.50 tape	201669-02		
5	1	-					Spacer, cap, pinch roller, 0.250	501050200		
6	-	1					Spacer, cap, pinch roller, 0.50	502050204		
7	1	1					Cap, pinch roller, blk	501050205-B4		
8	1	1					Retaining ring	112102	5103-25	79136
9	1	1					Screw, ovh, 6-32 x 5/16	110119		

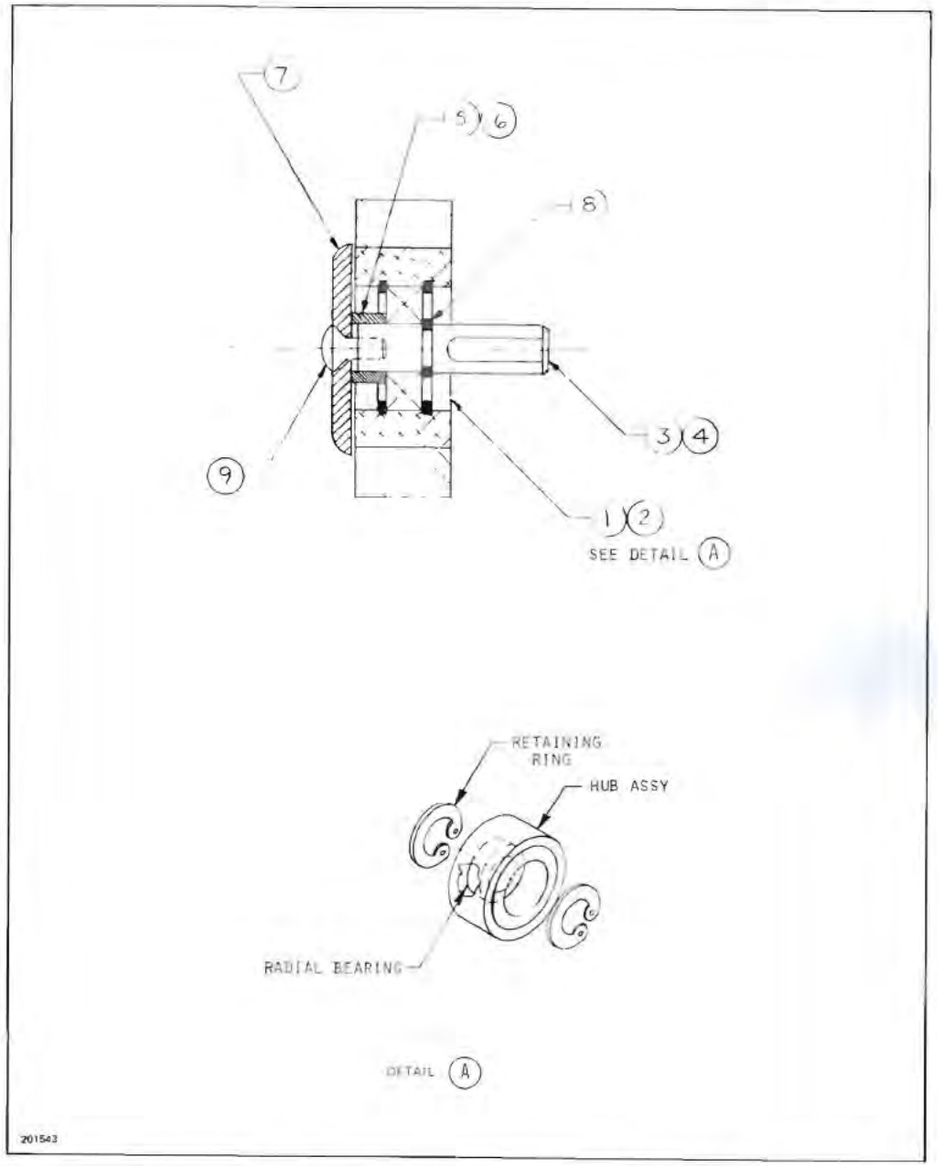

Figure 8-21. Pinch Roller Assembly

Table 8-1. Schematic Diagrams and Parts List

FIG. & REF.	QUANTITY PER ASSEMBLY -01	-02	-03				DESCRIPTION	PART NO.	MFR. PART NO.	CODE IDENT. NO.
B-22	Ref	-	-				Dancer assy, 1/4" (See Fig. B-15 for NHA)	202692-01		
	-	Ref	-				Dancer assy, 1/2" (See Fig. B-15 for NHA)	202692-02		
	-	-	Ref				Dancer assy, 1.00" (See Fig. B-15 for NHA)	202692-03		
1	1	1	1				Housing, dancer	202645-01		
2	2	2	2				Bumper, dancer arm	201866-01		
3	2	2	2				Bearing, radial, double sealed	112513	SR4CZ25-LY52	31633
4	2	2	2				Ring, retaining	112099	5008-62	79136
5	2	2	2				"O" ring	112514	2-8 BUNA N	83259
6	1	-	-				Dancer arm assy	202531-01		
7	-	1	-				Dancer arm assy	202531-02		
9	5	5	5				Washer, 0.375 od x 0.257 id x 0.030 thk	111113		
10	1	1	1				Retaining ring	112102	5103-25	79136
11	1	1	1				Washer, 0.375 od x 0.257 id x 0.003 thk	111110		
12	1	1	1				Washer, 0.375 od x 0.257 id x 0.005 thk	111111		
13	2	2	2				Washer, 0.375 od x 0.257 id x 0.010 thk	111112		
14	2	2	2				Washer, 0.375 od x 0.257 x 0.001 thk	111109		
15	1	1	1				Shaft, dancer pivot	201827-03		
16	-	-	1				Dancer arm assy	202531-03		
17	1	1	1				Screw, flh, 6132 x 3/8	110021		
18	ar	ar	ar				Loctite, threaded, adhesive sealer	112410		

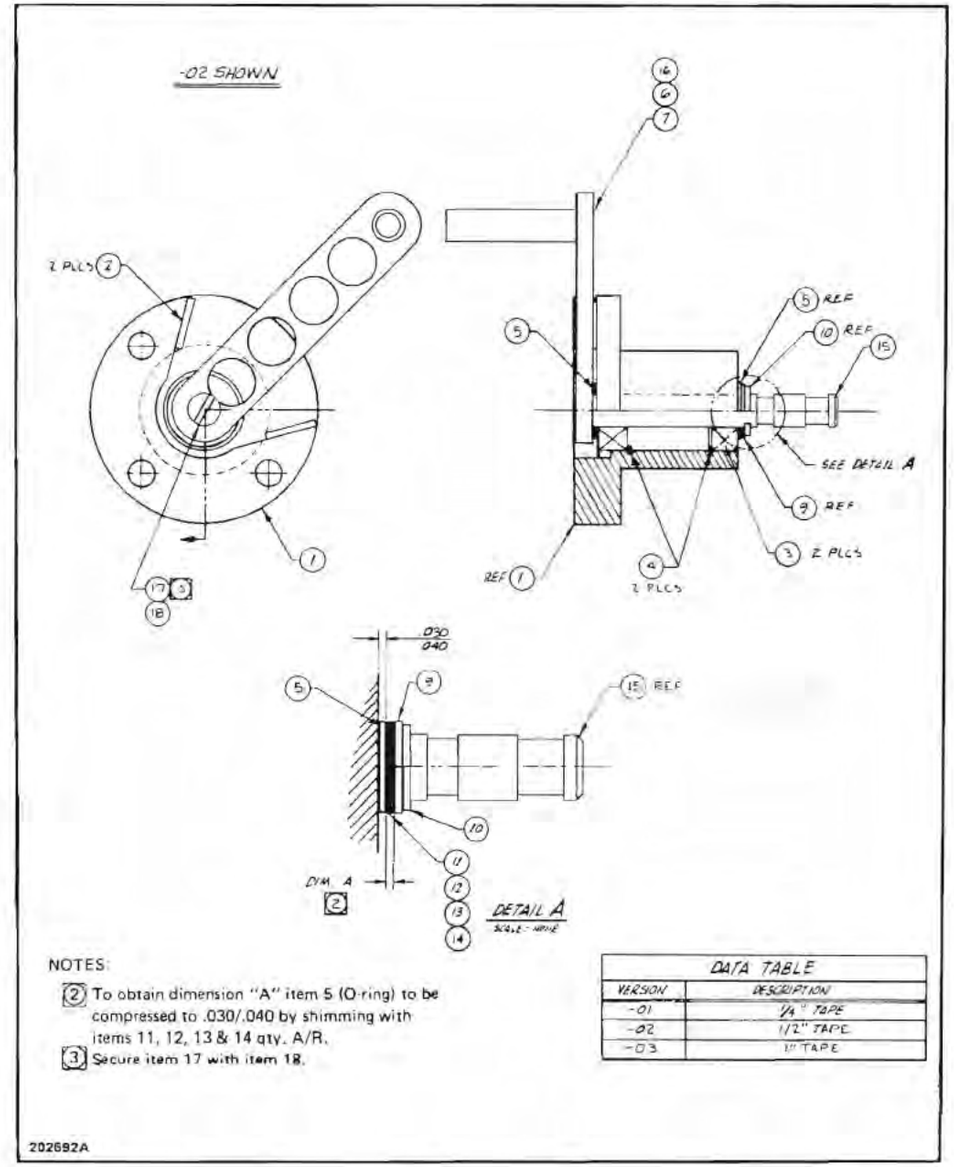

Figure 8-22. Dancer Assembly

Table 8-1. Schematic Diagrams and Parts List

FIG. & REF.	QUANTITY PER ASSEMBLY -01	-02					DESCRIPTION	PART NO.	MFR. PART NO.	CODE IDENT. NO.
8-23	Ref	-					Tape break arm assy, 0.25" tape (see Fig. 8-15 for NHA)	200709-01		
	-	Ref					Tape break arm assy, 0.50" tape (see Fig. 8-15 for NHA)	200709-01		
1	1	1					Bearing housing assy, blk (parts not sold separately)	502160200-04		
2	1	1					Tape break arm, blk	502160101-01		
3	1	1					Shaft, tension arm	501030303		
4	1	1					Microswitch adj collar	501030106		
5	1	1					Spring, torsion	502030102		
6	1	1					Spring adj collar	501030103		
7	1	1					Cap, pressure roller, blk	501050205-04		
8	1	1					Base section, tape guide	501030302-01		
9	1	1					Top section, tape guide	501030302-02		
10	1	-					Spacer, tape guide, 0.25"	501030302-03		
10	-	1					Spacer, tape guide, 0.50"	502030302-01		
11	1	-					Screw, filhd, 4-40 unc x 5/8	110222		
11	-	1					Screw, filhd, 4-40 unc x 7/8	110223		
12	1	1					Screw, ovh, 6-32 x 0.44	110121		
13	2	2					Setscrew, cup pt, 4-40 unc 1/8	110112		
14	1	1					Guide, tape break arm	502160102		

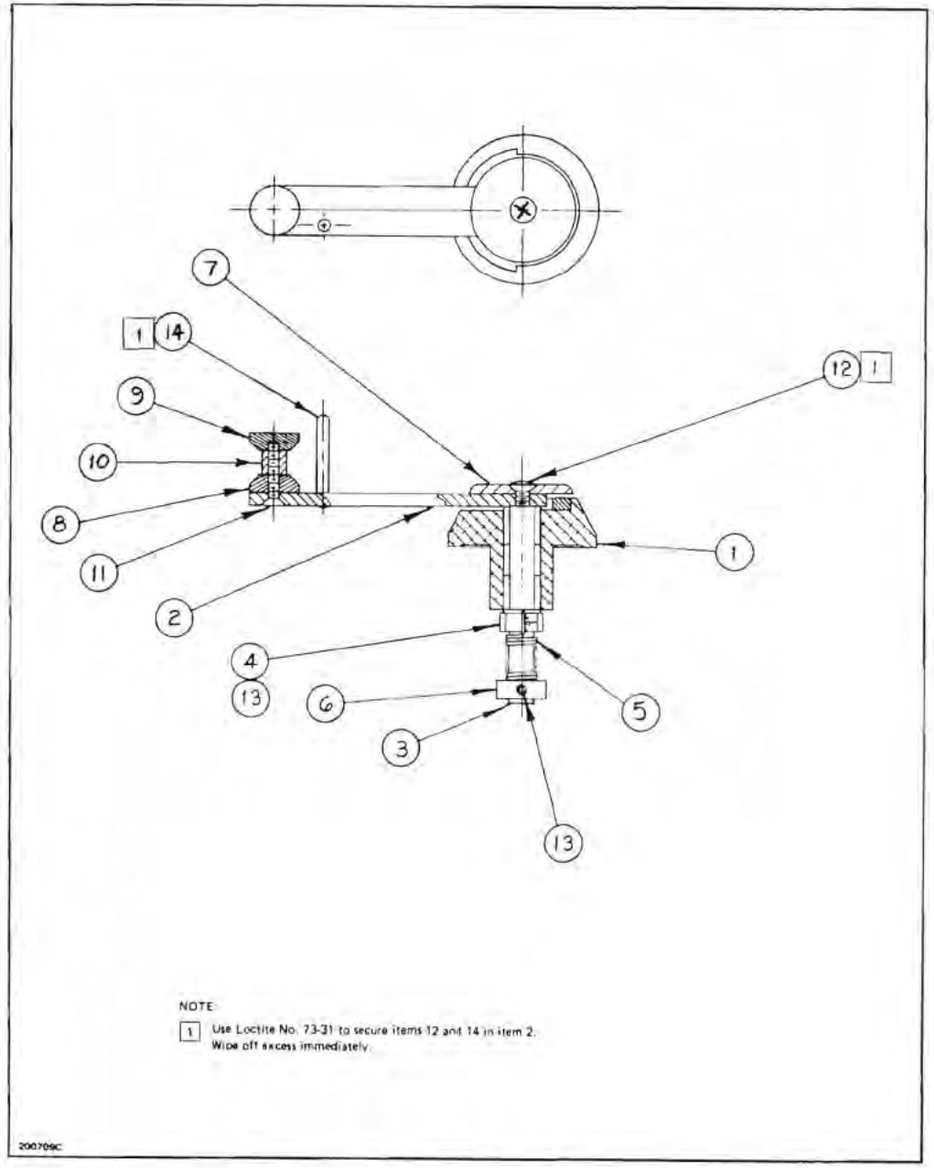

Figure 8-23. Tape Break Arm Assembly

Table 8-1. Schematic Diagrams and Parts List

FIG. & REF.	QUANTITY PER ASSEMBLY						DESCRIPTION	PART NO.	MFR. PART NO.	CODE IDENT. NO.
	-01	-02	-03	-04	-05	-06				
8-24	Ref	-	-	-	-	-	Head bridge assy, mono FT, 0.25 (see Fig. 8-15 for NHA)	202712-01		
	-	Ref	-	-	-	-	Head bridge assy, mono 1/2 trk, stereo 2 track, 0.25 (see Fig. 8-15 for NHA)	202712-02		
	-	-	Ref	-	-	-	Head bridge assy, stereo 1/4 trk, 0.25 (see Fig. 8-15 for NHA)	202712-03		
	-	-	-	Ref	-	-	Head bridge assy, quad 4 trk, 0.25 (see Fig. 8-15 for NHA)	202712-04		
	-	-	-	-	Ref	-	Head bridge assy, quad 4 trk, 0.50 (see Figs. 8-15 and 8-63 for NHA)	202712-05		
	-	-	-	-	-	Ref	Head bridge assy, stereo 2 trk, DIN (see Fig. 8-14 for NHA)	202712-06		
1	1	1	1	1	1	1	Head bridge mtg platform	200784-01		
2	2	2	2	2	-	2	Tape guide post assy, 0.25 (parts not sold separately)	502010102-01		
3	-	-	-	-	2	-	Tape guide post assy, 0.50 (parts not sold separately)	502010104-01		
4	1	1	1	1	1	1	Scrape filter assy, 0.25 - 0.50 (see Fig. 8-37 for bkdwn)	201929-01		
5	-	-	-	-	-	1	Rcd hd stack assy, 2 trk, 0.25 DIN (see Fig. 8-38 for bkdwn)	200603-06		
6	1	-	-	-	-	1	Erase hd stack assy, FT, 0.25 (see Fig. 8-41 for bkdwn)	200742-01		
7	-	1	-	-	-	-	Erase hd stack assy, 2 trk, 0.25 (see Fig. 8-41 for bkdwn)	200742-02		
8	-	-	1	-	-	-	Erase hd stack assy, stereo, 4 trk, 0.25 (see Fig. 8-41 for bkdwn)	200742-03		
9	-	-	-	1	-	-	Erase hd stack assy, quad, 4 trk, 0.25 (see Fig. 8-41 for bkdwn)	200742-04		
10	-	-	-	-	1	-	Erase hd stack assy, 4 trk, 0.50 (see Fig. 8-41 for bkdwn)	200742-05		

Table 8-1. Schematic Diagrams and Parts List

FIG. & REF.	QUANTITY PER ASSEMBLY -01	-02	-03	-04	-05	-06	DESCRIPTION	PART NO.	MFR. PART NO.	CODE IDENT. NO.
8-24							Head bridge assy (cont'd)	202712-		
11	1	-	-	-	-	-	Rcd hd stack assy, FT, 0.25 (see Fig. 8-38 for bkdwn)	200603-01		
12	-	1	-	-	-	-	Rcd hd stack assy, 2 trk, 0.25 (see Fig. 8-38 for bkdwn)	200603-02		
13	-	-	1	-	-	-	Rcd hd stack assy, stereo, 4 trk, 0.25 (see Fig. 8-38 for bkdwn)	200603-03		
14	-	-	-	1	-	-	Rcd hd stack assy, quad, 4 trk, 0.25 (see Fig. 8-38 for bkdwn)	200603-04		
15	-	-	-	-	1	-	Rcd hd stack assy, 4 trk, 0.50 (see Fig. 8-38 for bkdwn)	200603-05		
16	1	-	-	-	-	-	PB hd stack assy, FT, 0.25 (see Fig. 8-39 for bkdwn)	200579-01		
17	-	1	-	-	-	-	PB hd stack assy, 2 trk, 0.25 (see Fig. 8-39 for bkdwn)	200579-02		
18	-	-	1	-	-	-	PB hd stack assy, stereo, 4 trk, 0.25 (see Fig. 8-39 for bkdwn)	200579-03		
19	-	-	-	1	-	-	PB hd stack assy, quad, 4 trk, 0.25 (see Fig. 8-39 for bkdwn)	200579-04		
20	-	-	-	-	1	-	PB hd stack assy, 4 trk, 0.50 (see Fig. 8-39 for bkdwn)	200579-05		
21	-	-	-	-	-	1	PB hd stack assy, 2 trk, 0.25 DIN (see Fig. 8-39 for bkdwn)	200579-06		
22	4	4	4	4	1	4	Screw, btnhd, 10-32 x 3/8	110102		
23	3	3	3	3	3	3	Setscrew, ovp, 6-32 x 1/8	110136		
24	1	1	1	2	2	1	Screw, pnh, 4-40 x 1/4	110060		
26	1	1	1	1	1	1	Shield, PB hd	200474		
27	1	1	1	1	1	1	Tape guide, end	201879-01		
28	A/R	A/R	A/R	A/R	A/R	A/R	Loctite	162233		
29	-	-	-	-	2	-	Screw, btnhd, 10-32 x 1/4	110101		
30	-	-	-	-	1	-	Screw, btnhd, 10-32 x 5/16	110273		

Table 8-1. Schematic Diagrams and Parts List

FIG. & REF.	QUANTITY PER ASSEMBLY -01	-02	-03	-04	-05	-06	DESCRIPTION	PART NO.	MFR. PART NO.	CODE IDENT. NO.
8-24							Head bridge assy (cont'd)	202712-		
31	1	1	1	1	-	1	Base, input tape guide, 1/4"	202595-01		
32	-	-	-	-	1	-	Base, input tape guide, 1/2"	202595-02		
33	1	1	1	1	-	1	Spacer, tape guide, 1/4"	201850-01		
34	-	-	-	-	1	-	Spacer, tape guide, 1/2"	201850-02		
35	1	1	1	1	-	1	Screw, set, ovp, 8-32 x 1/2	110103		
36	-	-	-	-	1	-	Screw, set, ovp, 8-32 x 3/4	110382		

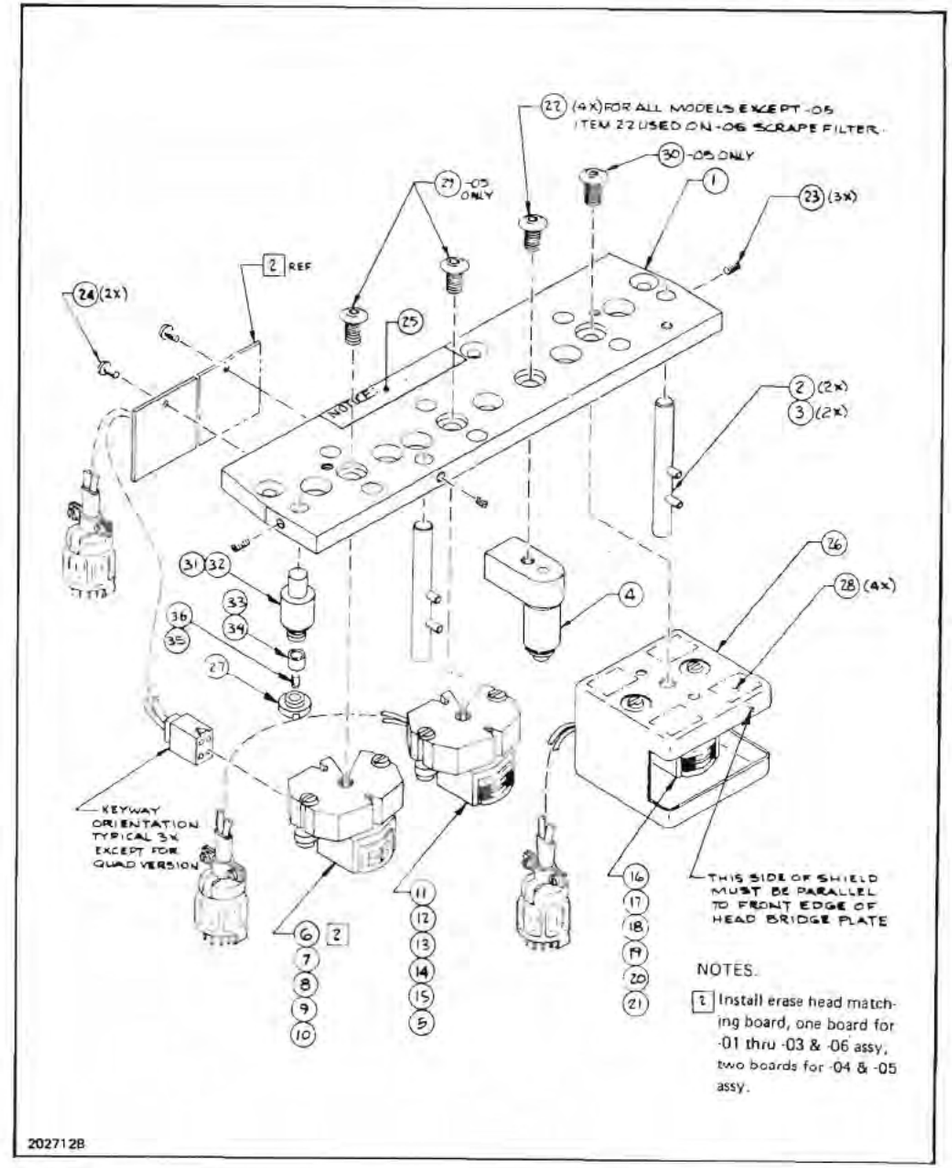

Figure 8-24. Head Bridge Assembly

FIG. & REF.	QUANTITY PER ASSEMBLY -01					DESCRIPTION	PART NO.	MFR. PART NO.	CODE IDENT. NO.
8-25	Ref					Pinch roller connecting rod assy (see Fig. 8-16 for NHA)	200560-01		
2	1					Nut, hex, special	501050303		
3	1					Rod, connecting, pressure roller	501050304		
4	2					Felt bumper	502010425-01		
5	1					Spring, compression, short	502050305		
6	1					Spring, compression, long	502050309		
7	1					Pad, cork, 0.38 od, 0.13 id, 0.03 thk	400333		
8	1					Stop, solenoid plunger	200557-01		
9	1					Solenoid, 24 Vdc	162101	2118	27190
10	2					Screw, pnh, 8-32 x 1/4	110168		
11	1					Setscrew, cup pt, 6-32 unc x 1/8	110136		
12	2					Setscrew, ovp, 10-32 unf x 1/2	110162		
13	2					Washer, flat, #8	111004		
14	2					Washer, flat, 0.227 id, 1/2 od x 0.049 thk	111098		
15	2					Lockwasher, int t, #8	111024		
16	1					Roll pin, 1/8 dia x 7/16	112120		
17	1					Actuating arm	501050301		
18	1					Conn, plug, 3-hole	160035	1625-3P-1	27264
19	2					Term, pin, 0.062 dia, male, 22 ga	160028	1560	27264
20	1					Pad, cork, 0.10 dia x 0.06 thk	200593-01		

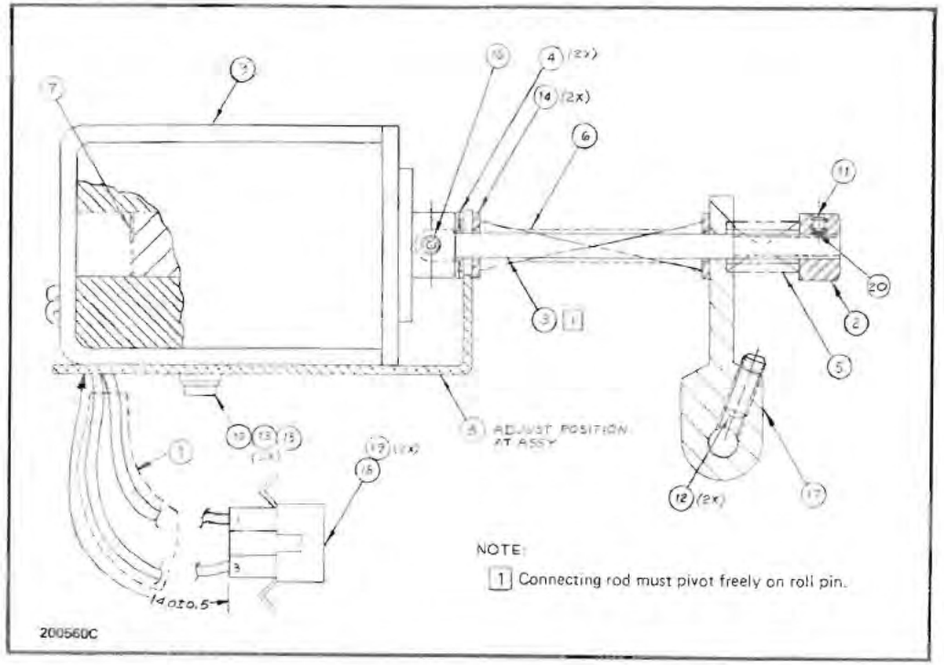

Figure 8-25. Pinch Roller Connecting Rod Assembly

FIG. & REF.	QUANTITY PER ASSEMBLY -01						DESCRIPTION	PART NO.	MFR. PART NO.	CODE IDENT. NO.
8-26	Ref						ATL solenoid assy (see Fig. 8-16 for NHA)	202691-01		
1	1						Rod, connecting	202592-01		
2	1						Arm, actuating	202593-01		
3	1						Spring, return	202594-01		
4	1						Collar, pluger stop	502010414-01		
5	2						Bumper, felt, large	502010415		
6	2						Bumper, felt, small	502010425-01		
8	1						Stop, solenoid plunger	200557-01		
9	1						Solenoid, 24 Vdc	162102	1544	27190
10	1						Conn, plug, 3-hole	160035	1625-3P-1	27264
11	2						Term, pin, 0.062 dia, male, 22 ga	160028	1560	27264
12	2						Setscrew, ovp, 10-32 x 0.25	110113		
13	1						Setscrew, cup pt, 4-40 x 1/4	110226		
14	2						Screw, pnh, 8-32 x 1/4	110168		
15	2						Washer, flat, #8	111004		
16	2						Lockwasher, int t, #8	111024		
17	1						Pin, roll, 0.125 x 0.437	112120		
18	1						Pin, cotter, 0.06 dia x 3/4	112124		
19	2						Washer, flat, 0.227 id x 0.50 od	111098	96310	73734

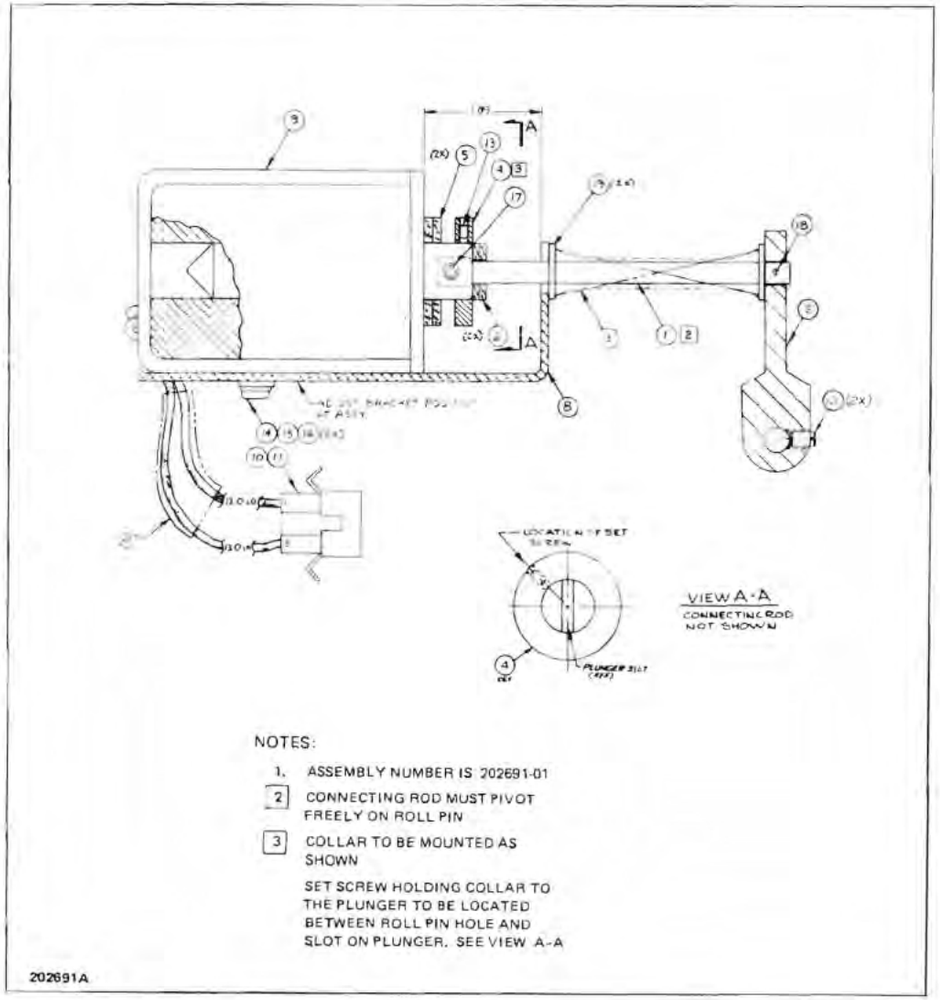

Figure 8-26. ATL Solenoid Assembly

Table 8-1. Schematic Diagrams and Parts List

FIG. & REF.	QUANTITY PER ASSEMBLY -01						DESCRIPTION	PART NO.	MFR. PART NO.	CODE IDENT. NO.
8-27	Ref						Power Supply assy, primary, 1/4, 1/2-in tape (see Fig. 8-16 for NHA)	202668-01		
3 A1	1						Power supply PWA (see Fig. 8-23 for bkdwn)	202595-01		
5	1						Screen cover	502100001		
6	18						Term, pin, 0.062 dia. female	160029	1561	27264
7 P102	1						Conn, rcpt, 15-hole	160050	1625-15R1	27264
8 J201	1						Conn, ac power	160125	EAC-301	82389
9 Ref J201	1						Cord, ac power	160126	P2392	82389
17 F201 F202 F203	3						Fuseholder, 3AG	162000	342004	75915
18 F203	1						Fuse, 3 AG, 1.0A	162006	312001	75915
19 F202	1						Fuse, 3 AG, 3.0A	162008	312003	75915
20 F201	1						Fuse, 3AG, 5.0A	162009	312005	75915
21 TB201 TB202	2						Tie strip, 4-point	162078	53F	71785
22	4						Screw, truss hd, 6-32 x 1/4	110122		
23	1						Screw, pnh, 6-32 x 5/8	110206		
24	4						Screw, pnh, 8-32 x 3/8	110171		
25	3						Screw, phn, 4-40 x 1/4	110173		
26	8						Screw, pnh, 6-32 x 5/16	110181		
27	2						Washer, flat, #4	111002		
28	6						Washer, flat, #6	111003		
29	4						Washer, flat, #8	111004		
30	4						Washer, lock, ext t, #8	111034		
31	5						Nut, kep, ext. lockwasher, 4-40	111062		

Table 8-1. Schematic Diagrams and Parts List

FIG. & REF.	QUANTITY PER ASSEMBLY -01						DESCRIPTION	PART NO.	MFR. PART NO.	CODE IDENT. NO.
8-27							Power supply assy, primary (con't)	202668		
32	8						Nut, kep, ext lockwasher, 6-32 x 1/4	111115		
33	1						Clamp, cable, plastic, 5/16 id	112136		
34	1						Grommet, rubber, 0.62 od x 0.31 id	112144		
35	2						Vert mtg clamp, 1-3/8 to 1-7/16	112183		
39	3						Screw, pnh, 6-32 x 1/2	110175		
43	2						Screw, pnh, 4-40 x 3/8	110172		
44	3						Washer, lock, int t, 1/2	111028		
45	1						Heatsink assy	202522-01		
46 S201	1						Sw	162111	518	83330
47 J203	1						Conn, rcpt, 6-position	160047	1625-6R	27264
48 P204	1						Conn, 3-position	160045	1625-3R1	27264
53 R204	1						Res, var, 250 KΩ ±10%	156112	380 C2	12697
54 CR205	1						Bridge, rectifier	153069	750B4L	81483
55 RV201	1						Varistor	153022	VP130A10	72653
58 R203	1						Res, carb, 10 KΩ ±5%, 1/4W	149052		
59 R205	1						Res, carb, 10 KΩ ±5%, 1/4W	149070		
61	4						Term, pin, male	160030	1854	27264
62 T201	1						Xfmr	157020		
63	1						Conn, rcpt, 0.058 dia	160237	60789-3	00779

Table 8-1. Schematic Diagrams and Parts List

FIG. & REF.	QUANTITY PER ASSEMBLY -01						DESCRIPTION	PART NO.	MFR. PART NO.	CODE IDENT. NO.
8-28	Ref						Torque motor & brake assy, supply (see Fig. 8-16 for NHA)	201693-01		
1	1						Motor assy, torque (see Fig. 8-45 for bkdwn)	200565-01		
2	1						Torque motor brake plate assy (see Fig. 8-46 for bkdwn)	502060300		
3	1						Motion direction sensor PWA (see Fig. 8-47 for bkdwn)	201620-01		
4	1						Bracket, motion direction sensor	201689-01		
5	1						Solenoid brake plate assy (see Fig. 8-48 for bkdwn)	502060200		
6	1						Brake plate assy (see Fig. 8-49 for bkdwn)	201704-01		
7	2						Bushing, Teflon	502060404		
8	1						Clamp, cable, nylon, 0.187 id	112411	8911	83330
9	1						Motion direction sensor arm assy	201702-01		
10	1						Brake disc assy	201828-01		
	2						. Setscrew, cup pt, 10-32 x 3/8	110149		
11	2						Pivot, motion actuator direction arm	201692-01		
12	2						Washer, flat, #8	111004		
13	2						Lockwasher, int t, #6	111023		
14	2						Screw, pnh, 6-32 x 3/8	110170		
15	3/8 in.						Tubing, 0.06 id x 0.187 od	161208		
16	2						Screw, pnh, 10-32 x 1/2	110329		
17	4						Lockwasher, int t, #10	111025		
18	4						Screw, pnh, 8-32 x 1/2	110165		
19	4						Lockwasher, int t, #8	111024		

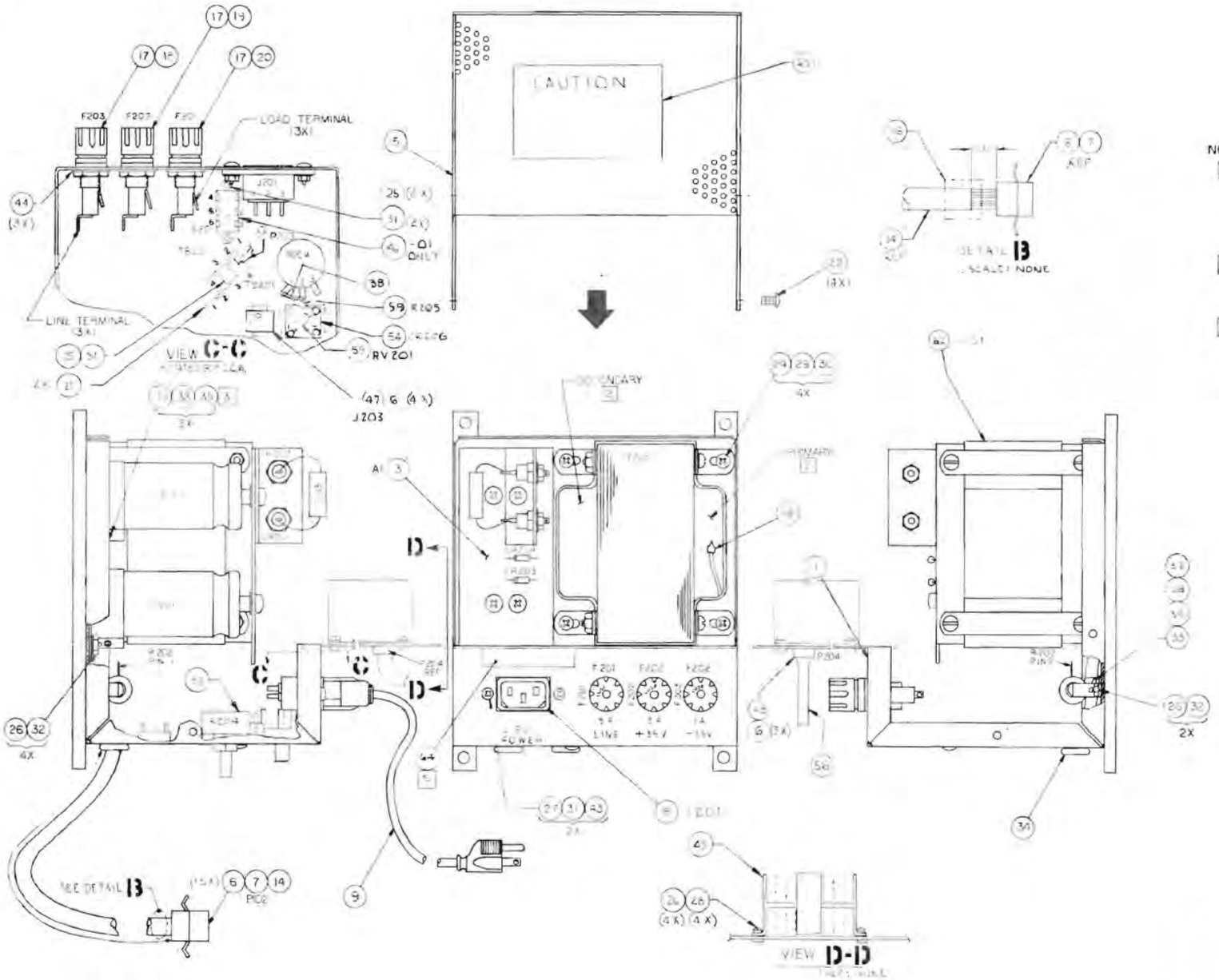

NOTES:

2 Transformer (ref for orientation):
-01 primary—10 wires (colors brn, grn, red, blu, yel, gry, orn, vio, red/yel, grn/yel).
Secondary—3 wires (colors two blk, wht)

3 Mount item 35 (ref capacitor mounting clamp, qty 2) so that screw-heads are accessible from outside of assembly.

5 Crimp item 63 to red wire of item 14, P1 shall be capable of mating to E8, 10, 12, 14 or 23. Select proper voltage and fill in voltage value on item 64 with permanent ink.

CONNECTION	VOLTAGE
[illegible]	[illegible]
[illegible]	[illegible]
[illegible]	[illegible]
[illegible]	[illegible]
[illegible]	[illegible]

202668C

Figure 8-27. Primary Power Supply

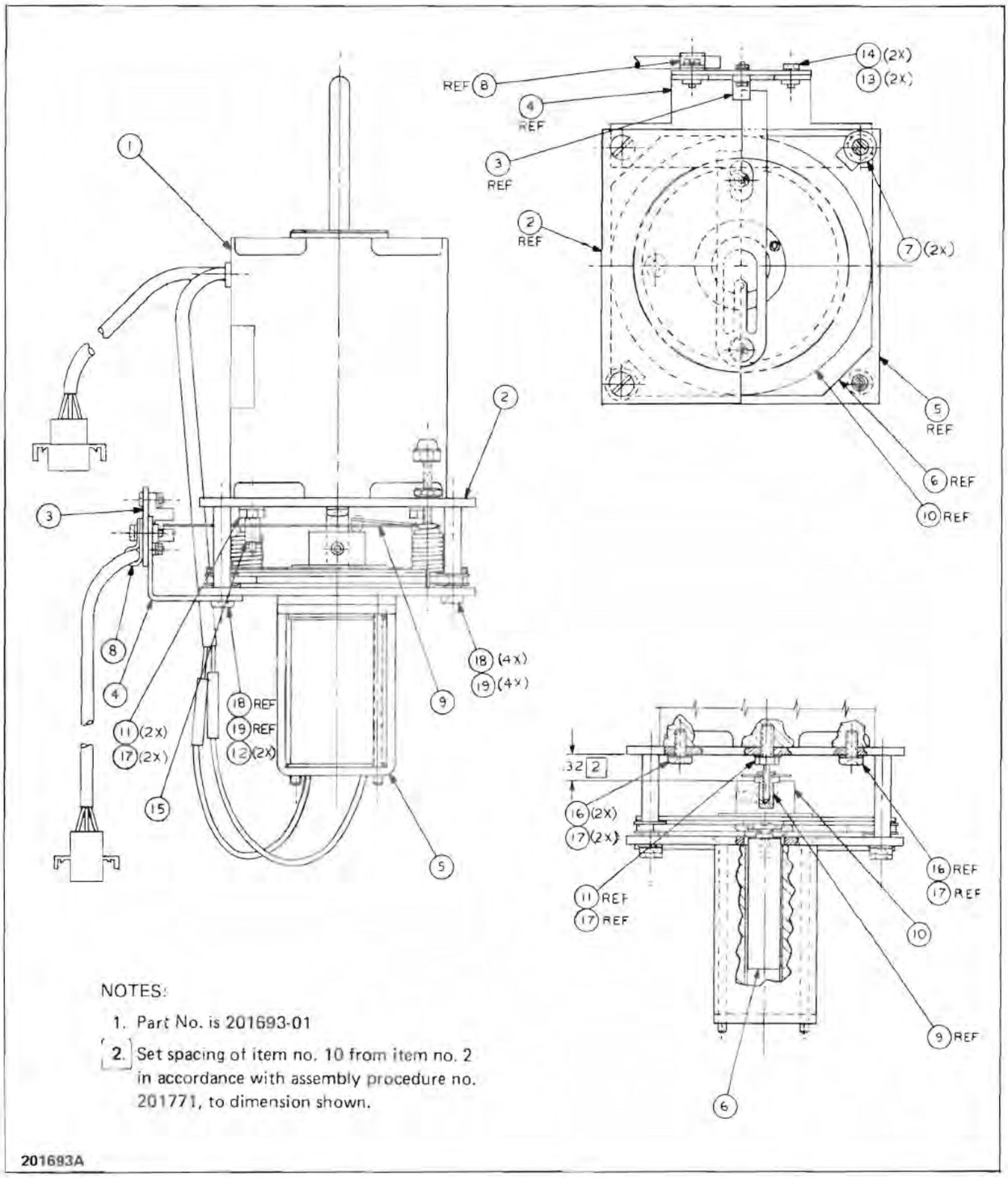

Figure 8-28. Torque Motor and Brake Assembly, Supply

FIG. & REF.	QUANTITY PER ASSEMBLY -01						DESCRIPTION	PART NO.	MFR. PART NO.	CODE IDENT. NO.
8-29	Ref						Torque motor and brake assy, take-up (see Fig. 8-16 for NHA)	201713-01		
1	1						Motor assy, torque (see Fig. 8-45 for bkdwn)	200565-01		
2	1						Torque motor brake plate assy (see Fig. 8-46 for bkdwn)	502060300		
3	1						Brake disc assy	201828-01		
	2						. Setscrew, cup pt, 10-32 x 3/8	110149		
4	1						Brake plate assy (see Fig. 8-49 for bkdwn)	201704-01		
5	1						Solenoid brake plate assy (see Fig. 8-48 for bkdwn)	502060200		
6	2						Bushing, Teflon	502060404		
7	4						Screw, pnh, 10-32 x 1/2	110329		
8	4						Lockwasher, int t, #10	111025		
9	4						Screw, pnh, 8-32 x 1/2	110165		
10	4						Lockwasher, int t, #8	111024		

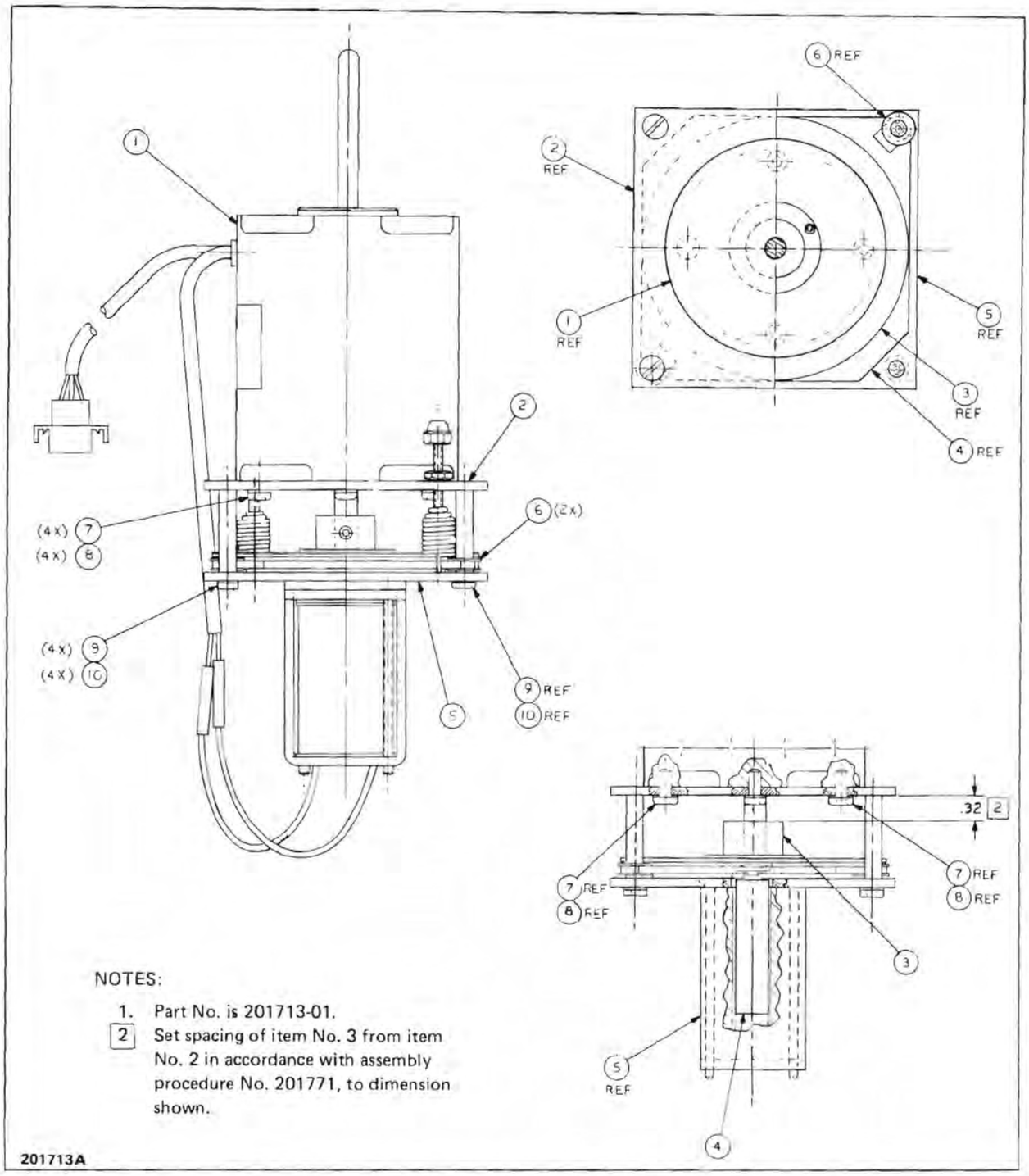

Figure 8-29. Torque Motor and Brake Assembly, Take-Up

Table 8-1. Schematic Diagrams and Parts List

FIG. & REF.	QUANTITY PER ASSEMBLY -01						DESCRIPTION	PART NO.	MFR. PART NO.	CODE IDENT. NO.
8-30	Ref						ATL linkage assy (see Fig. 8-16 for NHA)	502010400-11		
1	1						Lever, defeat	202573-01		
2	1						Knob, tape lifter	502010406-01		
3	1						Lifter, tape	502010407-01		
4	2						Spacer, link	502010411		
5	1						Arm, tape lifter*	502010401-01		
6	1						Rod, tape, guide	502010404-01		
7	1						Screw, pnh, 8-32 x 3/8	110081		
8	1						Setscrew, ovp, 8-32 x 3/16	110109		
9	2						Screw, truss hd, 6-32 x 1/4	110122		
10	1						Lockwasher, int t, #8	111024		
11	1						Dowel pin, 0.250 dia x 2.50*	112117		
12	2						Washer, spring, 0.190 id, 0.375 od	111010		
13	2						Washer, flat, #6	111003		
							*Order items 5 and 11 as a unit.			

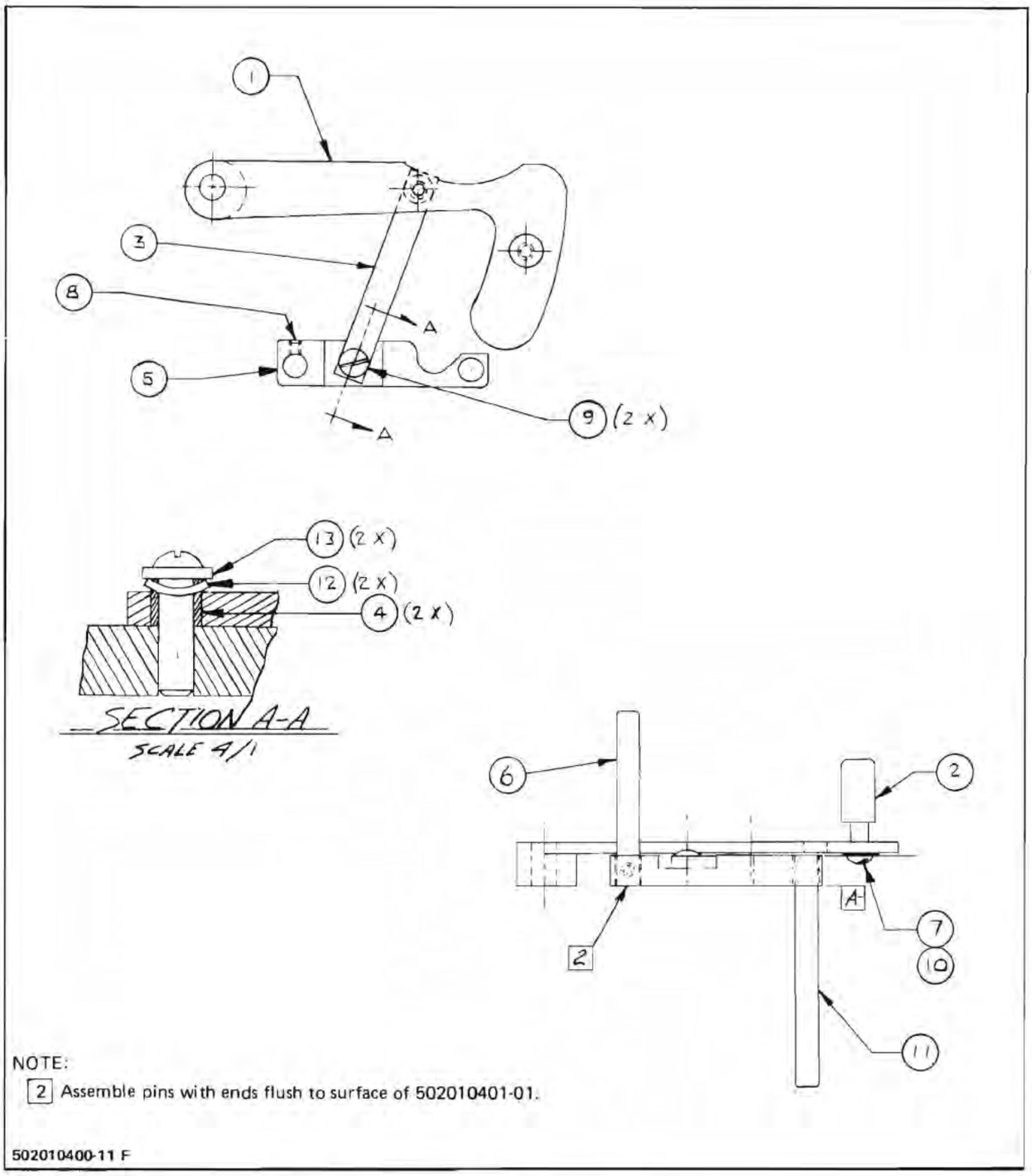

Figure 8-30. ATL Linkage Assembly

Table 8-1. Schematic Diagrams and Parts List

FIG. & REF.	QUANTITY PER ASSEMBLY						DESCRIPTION	PART NO.	MFR. PART NO.	CODE IDENT. NO.
8-31	Ref						Reel assy, turntable (see Fig 8-16 for NHA)	502060600		
1	1						Reel table assy	502060601-01		
	1						· Molded assy, turntable	400038		
	3						· Reel pin, 7 in	502060603		
2							Disc, turntable	400037		
4	2						Setscrew, 10-32 x 5/16	110259		
5	A/R						Foil sensing tape, 7/32 x 66	162347	84-9800-4486-5	66346

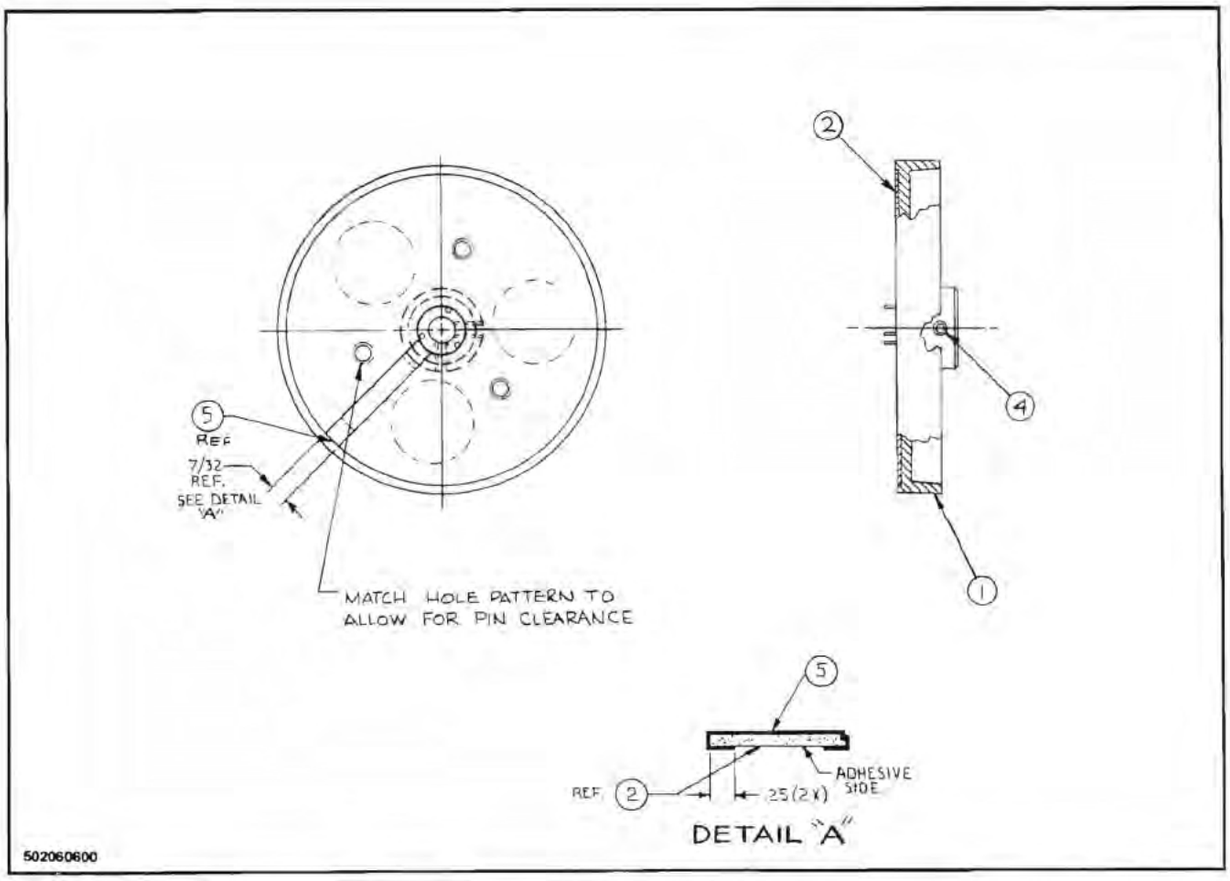

Figure 8-31. Turntable Reel Assembly Parts Location

FIG. & REF.	QUANTITY PER ASSEMBLY -01						DESCRIPTION	PART NO.	MFR. PART NO.	CODE IDENT. NO.
8-32	Ref						Transport logic PWA (see Fig. 8-19 for NHA)	202781		
R36, R41	2						Res, carb, 180Ω ±5%, 1/4W	149078		
R1	1						Res, ww, 10Ω ±5%, 2W	149022		
R8, R23	2						Res, carb, 4.7Ω ±5%, 1/4W	149068		
R40	1						Res, carb, 47Ω ±5%, 1/4W	149115		
R9, R18, R21, R24, R25, R32, R33	7						Res, carb, 220Ω ±5%, 1/4W	149118		
R3-R5, R26, R34, R39	6						Res, carb, 1 kΩ ±5%, 1/4W	149011		
R13, R14, R27, R43-R47, R49	9						Res, carb, 2.2 kΩ ±5%, 1/4W	149098		
R11	1						Res, carb, 3.9 kΩ ±5%, 1/4 W	149086		
R6, R12, R35, R42, R48	5						Res, carb, 1.5 kΩ ±5%, 1/4W	149122		
R20, R30	2						Res, carb, 150Ω ±5%, 1/4W	149117		
R19, R31	2						Res, carb, 27 kΩ ±5%, 1/4W	149047		
R7, R15-R17, R28, R29, R37, R38	8						Res, carb, 10Ω ±5%, 1/2W	150307		
R2, R10, R22	3						Res, carb, 68 kΩ ±5%, 1/4W	149156		

Table 8-1. Schematic Diagrams and Parts List

FIG. & REF.	QUANTITY PER ASSEMBLY -01						DESCRIPTION	PART NO.	MFR. PART NO.	CODE IDENT. NO.
8-32							Transport Logic PWA (cont'd)	202781		
C5-C8, C13, C14, C22-C25, C32-C35	14						Cap, cer disc, 0.05 µF ±20%, 500V	163006	5GA-S50	56289
C3, C4, C12, C16, C18-C20, C36, C38, C41-C43	12						Cap, cer disc, 0.02 µF ±20%, 25V	163016	Type M-25	91418
C10, C17, C27, C29, C30, C39	6						Cap, Ta, rdl ld, 1.0 µF ±20%, 35V	171003	TAG-20-1.0/35-20	71468
C40	1						Cap, Ta, rdl ld, 2.2 µF ±20%, 35V	171006	TAG-20-2.2/35-20	71468
C21	1						Cap, elctlt, aluminum, vert, mintr, 10 µF, 63V	164065	503D1060063BB	76289
C1, C9, C15, C26, C37	5						Cap, Ta, rdl ld, 10 µF ±20%, 35V	171013	TAG-20-10/35-20	71468
C2	1						Cap, Ta, rdl ld, 47 µF ±20%, 6.3V	171014	TAG-20-47/6.3-20	71468
C11, C28	2						Cap, cer disc, 0.1 µF, +80%, -20%, 12V	163082	UK10-104	71590
C31	1						Cap, Ta, rdl ld, 150 µF ±10%, 6V	171035	196D156X9006-LA3	56289
Q2, Q3, Q6, Q8	4						Xstr	152111	X40K344	03508
Q7	1						Xstr	152036	D40C7	03508
Q1, Q4, Q5, Q9-Q16	11						Xstr	152050	2N4401	

Table 8-1. Schematic Diagrams and Parts List

FIG. & REF.	QUANTITY PER ASSEMBLY -01						DESCRIPTION	PART NO.	MFR. PART NO.	CODE IDENT. NO.
8-32							Transport logic PWA (continued)	202781		
CR1, CR2, CR3, CR9, CR10, CR11, CR13, CR14	8						Diode	153000	1N4148	
CR4, CR6, CR7, CR8, CR16	5						Diode	153001	SD-05	12060
CR5, CR12	2						Diode, Zener, 36V, 5%	153054	1N4753A	04713
CR15, CR17	2						Diode	153007	1N695	07933
U10, U12	2						IC	155002	SN7402-N	33809
U1, U7	2						IC	155035	SN7414-N	33809
U2	1						IC	155008	SN7408-N	33809
U3, U4, U6, U9	4						IC	155015	SN7432-N	33809
U8	1						IC	155041	SN7411-N	33809
U11	1						IC	155044	SN74121-N	33809
U5	1						IC	155053	SN74249-N	
Ref K1-K3	3						Skt, relay, 4pdt, pc	156002	RA78702	0000A
K1-K3	3						Relay, 4pdt, 24 Vdc	156008	RA4D0-24	0000A
Ref K1-K3	3						Spring, hold-down	156062	RA28800	0000A
44 J208	1						Wafer assy, 3 circuit	160002	A-2403-3A	27264
45 J-207, J208	2						Wafer assy, 6 circuit	160010	A-2403-6A	27264

Table 8-1. Schematic Diagrams and Parts List

FIG. & REF.	QUANTITY PER ASSEMBLY -01						DESCRIPTION	PART NO.	MFR. PART NO.	CODE IDENT. NO.
8-32							Transport logic PWA (continued)	202781		
46 J203, J204	2						Wafer assy, 8 circuit	160011	A-2403-8A	27264
47 J202, J205	2						Wafer assy, 12 circuit	160012	A-2403-12A	27264
Ref U1-U4, U6-U12	11						Skt, IC, DIP, 14-pin	162342	314-AG-37D	91506
Ref U5	1						Skt, IC, DIP, 16-pin	162343	316-AG-37D	91506
C44	1						Cap, cer, mono, 470 pF ±15%, 50V	163090	3418-100C-471K	00656
53 Ref Q2, Q3, Q6, Q8	5						Transipad	152083		

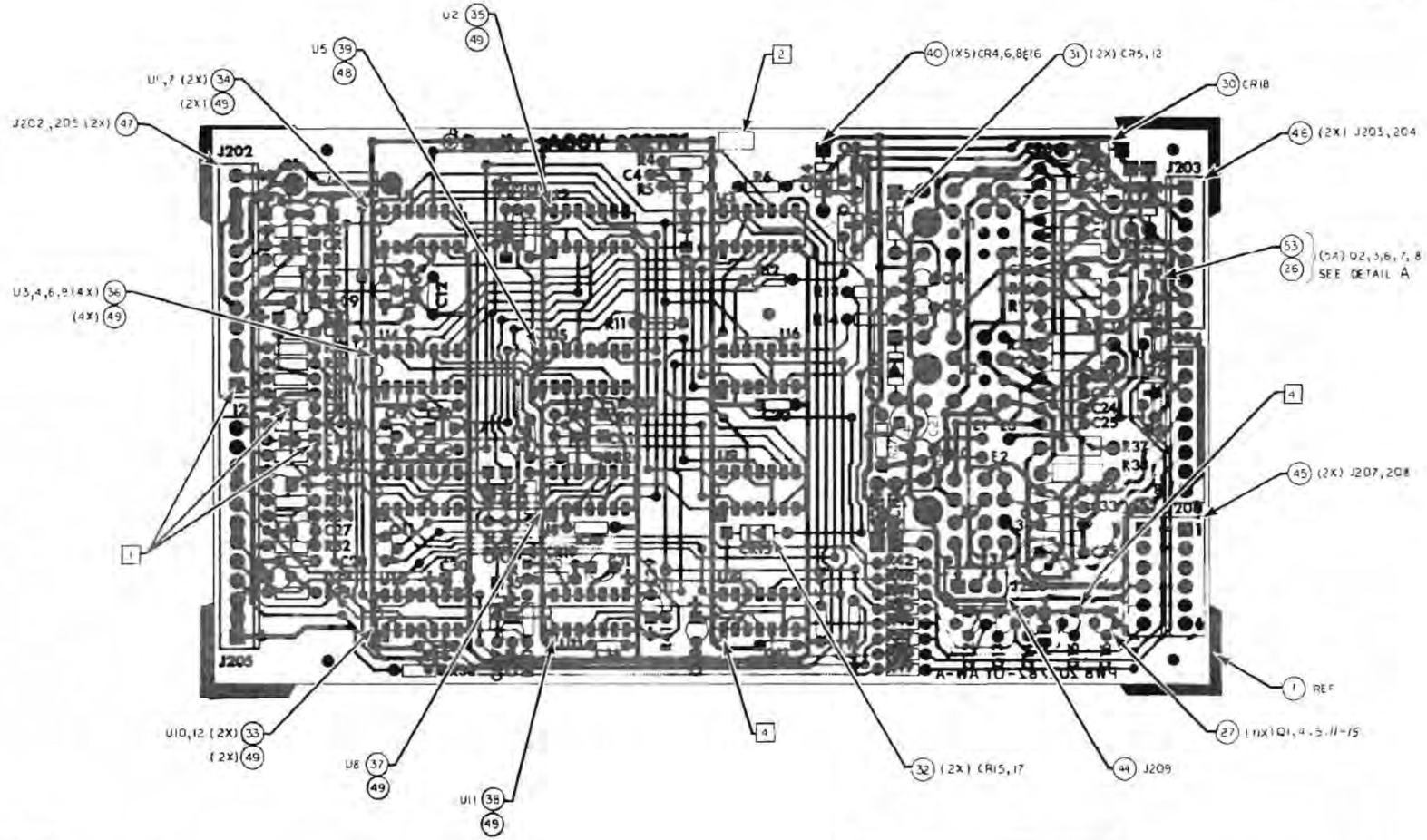

NOTES — UNLESS OTHERWISE SPECIFIED:

1. SQUARE PAD INDICATES PIN ONE OF DUAL-IN-LINE AND ORIENTATION MARKER ON OTHER I.C'S, EMITTER OF TRANSISTORS, CATHODE OF DIODES, AND POSITIVE SIDE OF CAPACITORS.
2. MARK DASH NUMBER AND ISSUE LETTER WHERE SHOWN USING .12 HIGH CHARACTERS AND BLACK EPOXY INK.
3. REFERENCE:
   SCHEMATIC = 202783, 202868, 202869, 202870.
4. PADS WITH TABS INDICATE EMITTER OF TRANSISTOR AND PIN 1 OF DUAL-IN-LINE ON I.C'S.

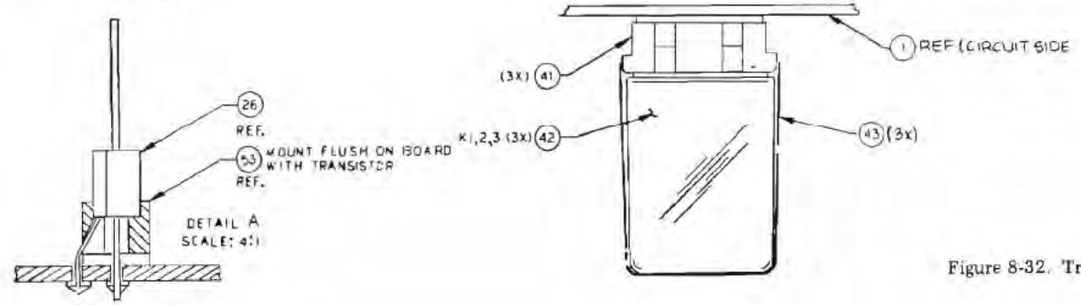

202781A

Figure 8-32. Transport Control Logic PWA

FIG. & REF.	QUANTITY PER ASSEMBLY -01						DESCRIPTION	PART NO.	MFR. PART NO.	CODE IDENT. NO.
8-33	Ref						Switch plate assy (see Fig. 8-19 for NHA)	202670-01		
1	1						Motor speed and equalization sw assy	200672-01		
S109	1						. Sw, rotary, modified	200681		
	4						. Cap, cer disc, 0.05 uF ±20%, 500W	163006	5GA-S50	56289
	2						. Res, carb, 100 ±5%, 1/2W	150307		
2	1						Plate, sw, control chassis	200716-01		
S102, S105-S108, S110	6						Sw, push [illegible]	162183	01-748510	04426
S101, S104	2						Sw, rotary	162151	1575-VA	04009
Ref S102	1						Pushbutton, red	162184	01-931312	04426
Ref S105, S106	2						Pushbutton, blu	162185	01-931313	04426
Ref S108	1						Pushbutton, grn	162186	01-931314	04426
Ref S107	1						Pushbutton, wht	162187	01-931311	04426
Ref S110	1						Pushbutton, yel	162188	01-931315	04426
Ref S102, S105-S108, S110	6						Lamp bulb, indicator	162157	335	71744
12	6						Lockwasher, int t, 0.472 id 19/32 od	111196		
13	6						Nut, panel, 15/32 x 9/16 x 5/64	111162		
14	3						Washer, lock, int t, 3/8 nom	111027		

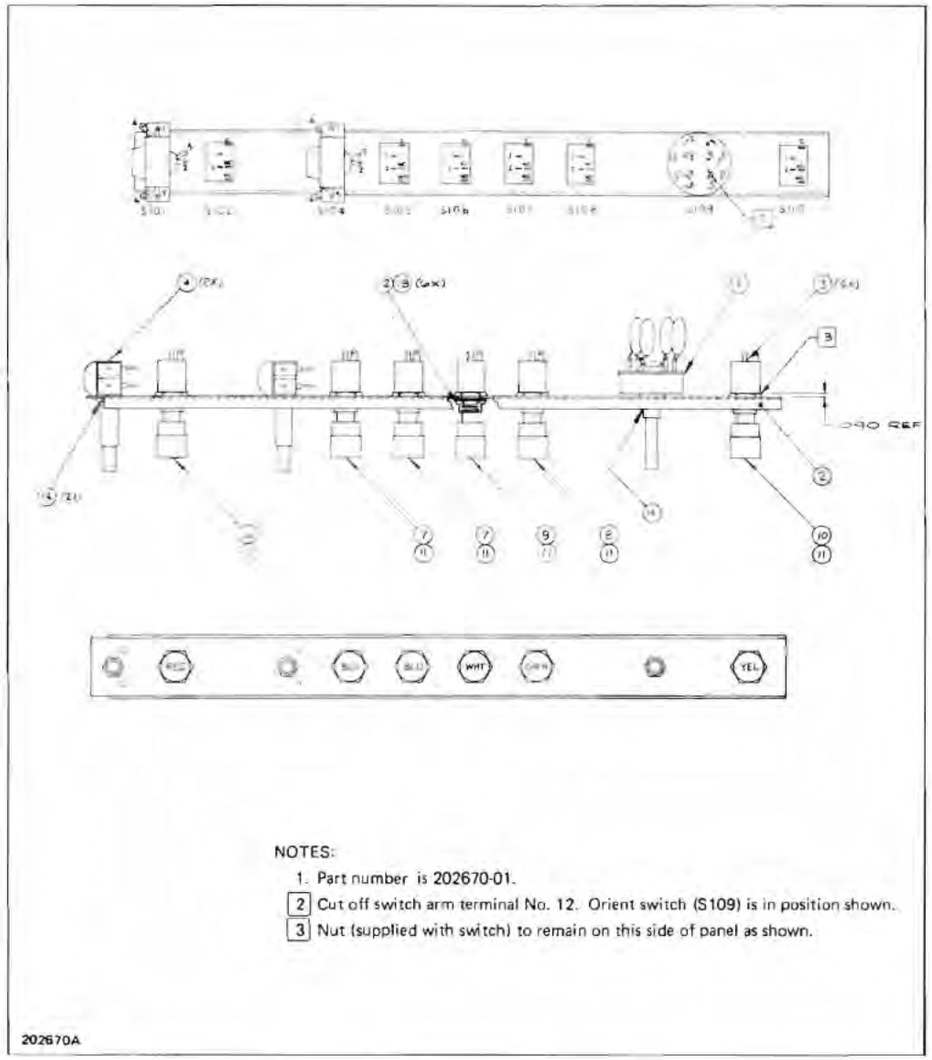

Figure 8-33. Switch Plate Assembly

Table 8-1. Schematic Diagrams and Parts List

FIG. & REF.	QUANTITY PER ASSEMBLY -01						DESCRIPTION	PART NO.	MFR. PART NO.	CODE IDENT. NO.
8-34	Ref						Harness assy, xport control logic (see Fig. 8-19 for NHA)	201711-01		
1 P207, P208	2						Conn, sq wire, 6 holes	160022	2139-6-2	27264
2 P202, P205	2						Conn, sq wire, 12 holes	160024	2139-12-2	27264
3 J101, J108	2						Conn, plug, 3 holes	160035	1625-3P	27264
5 J111	1						Conn, rcpt, 15 holes	160050	1625-15R1	27264
6 Ref P202, P205, P207, P208	34						Term, sq wire, crimp style, -22, -26 ga	160000	2378-T	27264
7 Ref J101, J108	5						Term, pin, 0.062 dia, male, 22 ga	160030	1854	27264
8 Ref J109, J111	14						Term, pin, 0.062 dia, female, 22 ga	160031	1855	27264

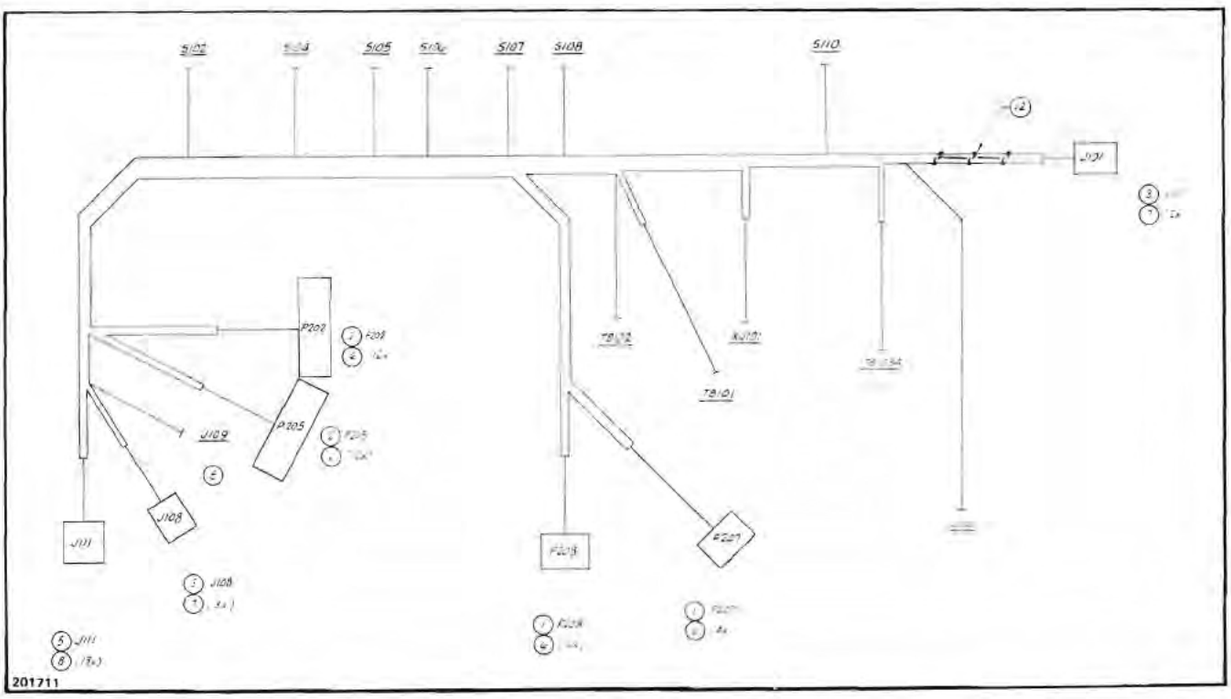

Figure 8-34. Transport Control Logic Harness Assembly

Table 8-1. Schematic Diagrams and Parts List

FIG. & REF.	QUANTITY PER ASSEMBLY -01						DESCRIPTION	PART NO.	MFR. PART NO.	CODE IDENT. NO.
8-35	Ref						Harness assy, xport cont power (see Fig. 8-19 for NHA)	202669-01		
1 P203, P204	2						Conn, sq wire, 8 holes	160023	2139-8-2	27264
2 J104, J105	2						Conn, rcpt, 3 holes	160045	1625-3R1	27264
3 J103, J106	2						Conn, rcpt, 9 holes	160004	1625-9R	27264
4 J107, J109	2						Conn, rcpt, 12 holes	160049	1625-12R1	27264
5 J102	1						Conn, plug, 15 holes	160040	1625-15P	27264
7	16						Term, sq wire, crimp style, -22, -26 ga	160000	2378-T	27264
8	15						Term pin, 0.062 dia, male, 22 ga	160030	1854	27264
9 Ref C101-C103	6						Term, qdisc, 0.250, 22-18 ga	160016	AA-1140	98410
10	33						Term, pin, 0.062 dia, female, 22 ga	160031	1855	27264
11 RV-101, RV-102	2						Varistor, symmetrical	153022	VP130-A10	03508

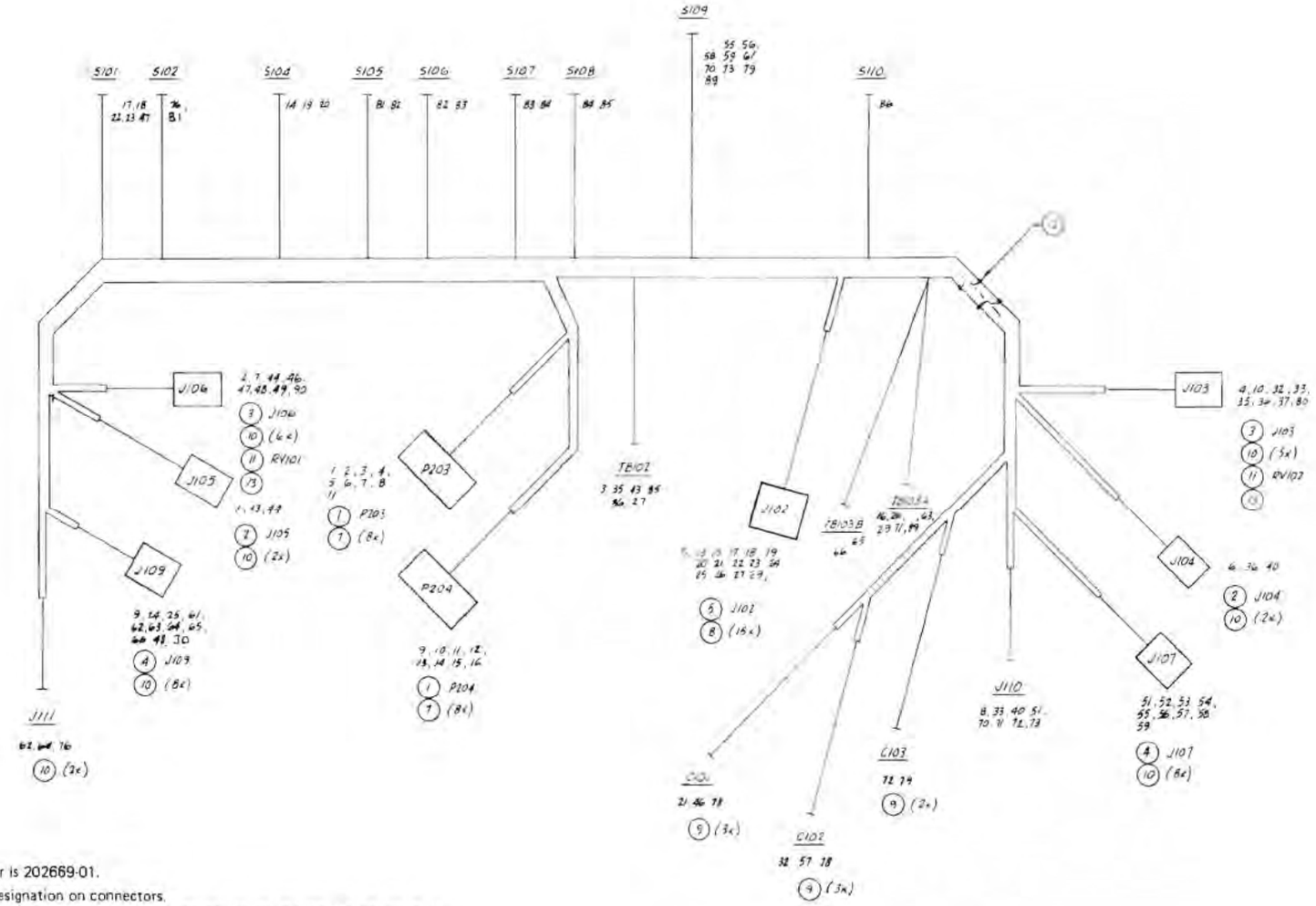

NOTES:

1. Assembly number is 202669-01.
2. Mark reference designation on connectors.
3. Wire numbers not used: 31, 34, 38, 39, 41, 42, 45, 50, 60, 67, 68, 69, 74, 75, & 77.

202669A

Figure 8-35. Transport Control Power Harness Assembly

Table 8-1. Schematic Diagrams and Parts

FIG. & REF.	QUANTITY PER ASSEMBLY -01	-02	-03	-04			DESCRIPTION	PART NO.	MFR. PART NO.	CODE IDENT. NO.
8-36	Ref	-	-	-			Capstan motor assy, 3.75 - 7.50, 60 Hz (see Fig. 8-20 for NHA)	200563-01		
	-	Ref	-	-			Capstan motor assy, 7.50 - 15.0, 60 Hz (see Fig. 8-20 for NHA)	200563-02		
	-	-	Ref	-			Capstan motor assy, 3.75 - 7.50, 50 Hz (see Fig. 8-20 for NHA)	200563-03		
	-	-	-	Ref			Capstan motor assy, 7.50 - 15.0, 50 Hz (see Fig. 8-20 for NHA)	200568-04		
1	1	-	-	-			Motor, capstan, hyst, sync, 60 Hz	041010706	D84HCE2U-52F	04810
1	-	1	-	-			Motor, capstan, hyst, sync, 60 Hz	041010702	D84HCE2U-52B	04810
1	-	-	1	-			Motor, capstan, hyst, sync, 50 Hz	041010705	D84HCE2U-52E	04810
1	-	-	-	1			Motor, capstan, hyst, sync, 50 Hz	041010704	D84HCE2U-52A	04810
2	8	8	8	8			Term, pin, 0.062 dia, male, 18-22 ga	160028	1560	27264
3	1	1	1	1			Conn, plug, 12 hole	160039	1625-12P-1	27264

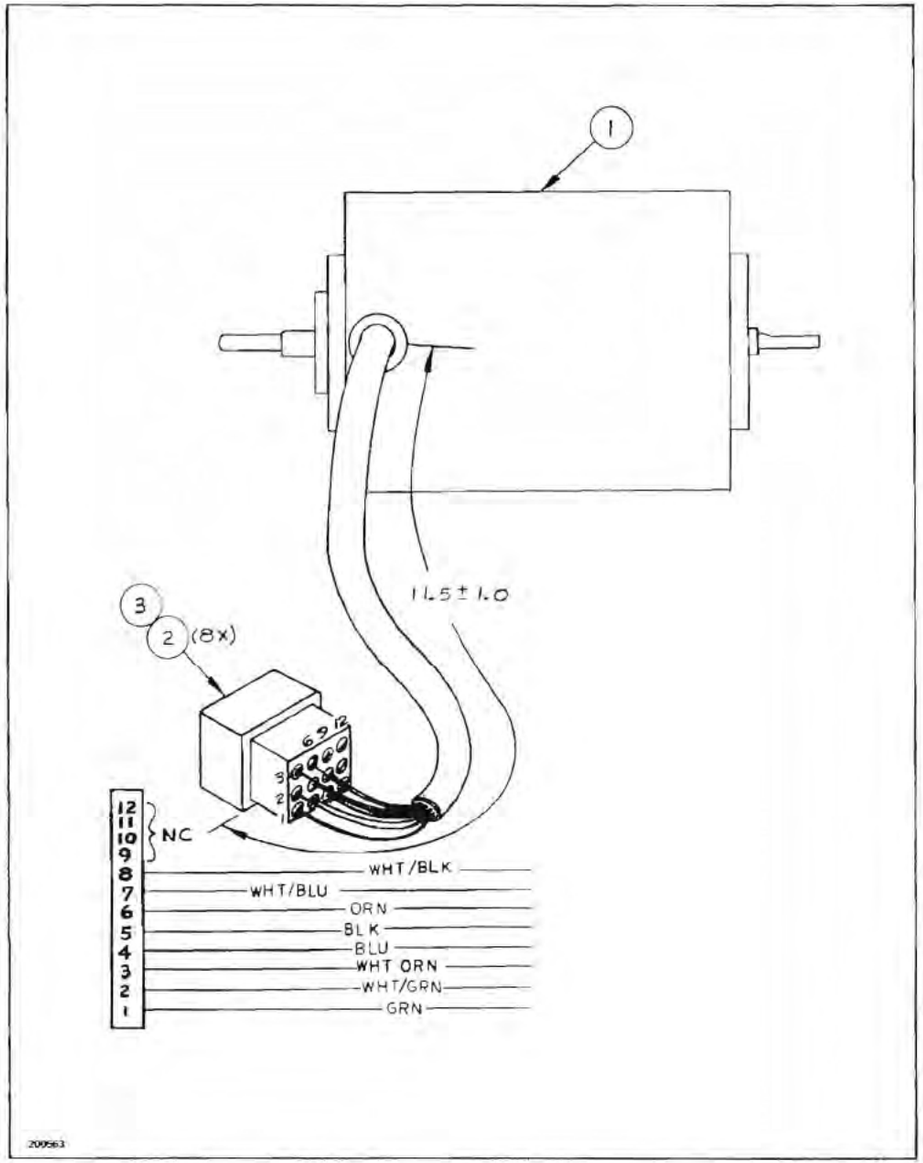

Figure 8-36. Capstan Motor Assembly

Table 8-1. Schematic Diagrams and Parts List

FIG. & REF.	QUANTITY PER ASSEMBLY -01						DESCRIPTION	PART NO.	MFR. PART NO.	CODE IDENT. NO.
8-37	Ref						Scrape filter assy (see Fig. 8-24 for NHA)	201929-01		
1	1						Mount	201934-01		
4	1						Roller	502010302-02		
3	2						Bearing, flanged ball, 0.1875 id x 0.3125 od	112005	S5632, FCHHE-LO-1	31633
6	1						Grip ring	112237	5555-18	79136

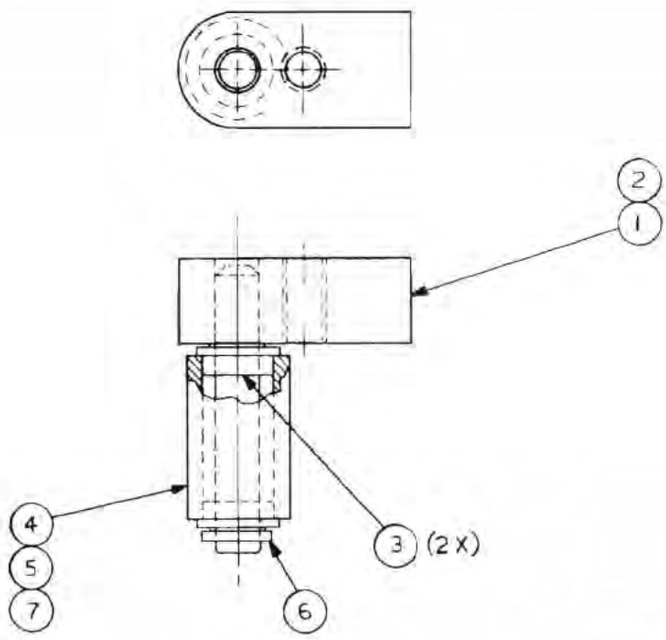

NOTES:

1. Assembly part no. is 201929-01
2. Install items 3,4 (or 5) on shaft as shown and secure with item 6. Assembly to be free of end play with item 6 properly installed.

201929B

Figure 8-37. Scrape Filter Assembly

Table 8-1. Schematic Diagrams and Parts List

FIG. & REF.	QUANTITY PER ASSEMBLY -01	-02	-03	-04	-05	-06	DESCRIPTION	PART NO.	MFR. PART NO.	CODE IDENT. NO.
8-38	Ref	-	-	-	-	-	Record head assy, FT, 0.25 (see Fig. 8-24 for NHA)	200603-01		
	-	Ref	-	-	-	-	Record head assy, 2 trk, 0.25 (see Fig. 8-24 for NHA)	200603-02		
	-	-	Ref	-	-	-	Record head assy, 4 trk stereo, 0.25 (see Fig. 8-24 for NHA)	200603-03		
	-	-	-	Ref	-	-	Record head assy, quad, 4 trk, 0.25 (see Fig. 8-24 for NHA)	200603-04		
	-	-	-	-	Ref	-	Record head assy, 4 trk, 0.50 (see Fig. 8-24 for NHA)	200603-05		
	-	-	-	-	-	Ref	Record head assy, 2 trk, DIN, 0.25 (see Fig. 8-24 for NHA)	200603-06		
1	1	-	-	-	-	-	Record head assy	200517-05		
2	1	1	1	1	-	1	Head mtg platform	200581-01		
3	1	-	-	-	-	-	Head cable assy (see Fig. 8-40 for bkdwn)	502011200-01		
4	-	1	1	-	-	1	Head cable assy (see Fig. 8-40 for bkdwn)	502011200-02		
5	1	1	1	1	1	1	Screw, btn hd, 6-32 x 3/4	110074		
6	2	2	2	2	-	2	Setscrew, oval pt. 6-32 x 1/4, blk oxide	110110		
7	-	1	-	-	-	-	Record head assy	200602-02		
8	-	-	-	-	1	-	Head mtg platform	200581-02		
9	-	-	-	-	1	-	Record head	180007	STR-4BN31-E099	11983
10	-	-	-	-	1	-	Head cable assy (see Fig. 8-40 for bkdown)	502011200-04		
11	-	-	1	-	-	-	Record head assy	200602-06		
12	-	-	-	-	-	1	Record head w/ base, DIN	1800024	PR-B2G11-SR-B18	11983
13	-	-	-	1	-	-	Head Cable Assy	502011400-44		
14	-	-	-	1	-	-	Record head assy	200602-08		
15	-	-	-	-	2	-	Screw, set, ovp, 6-32 x 3/16	110360		
16	-	-	-	-	1	-	Screw, pnh, 6-32 x 0.50	110072		
17	1	1	1	1	-	1	Screw, pnh, 6-32 x 1.00	110076		
18	1	1	1	1	1	1	Spring, compression, 0.240 od x 5/16	112509		

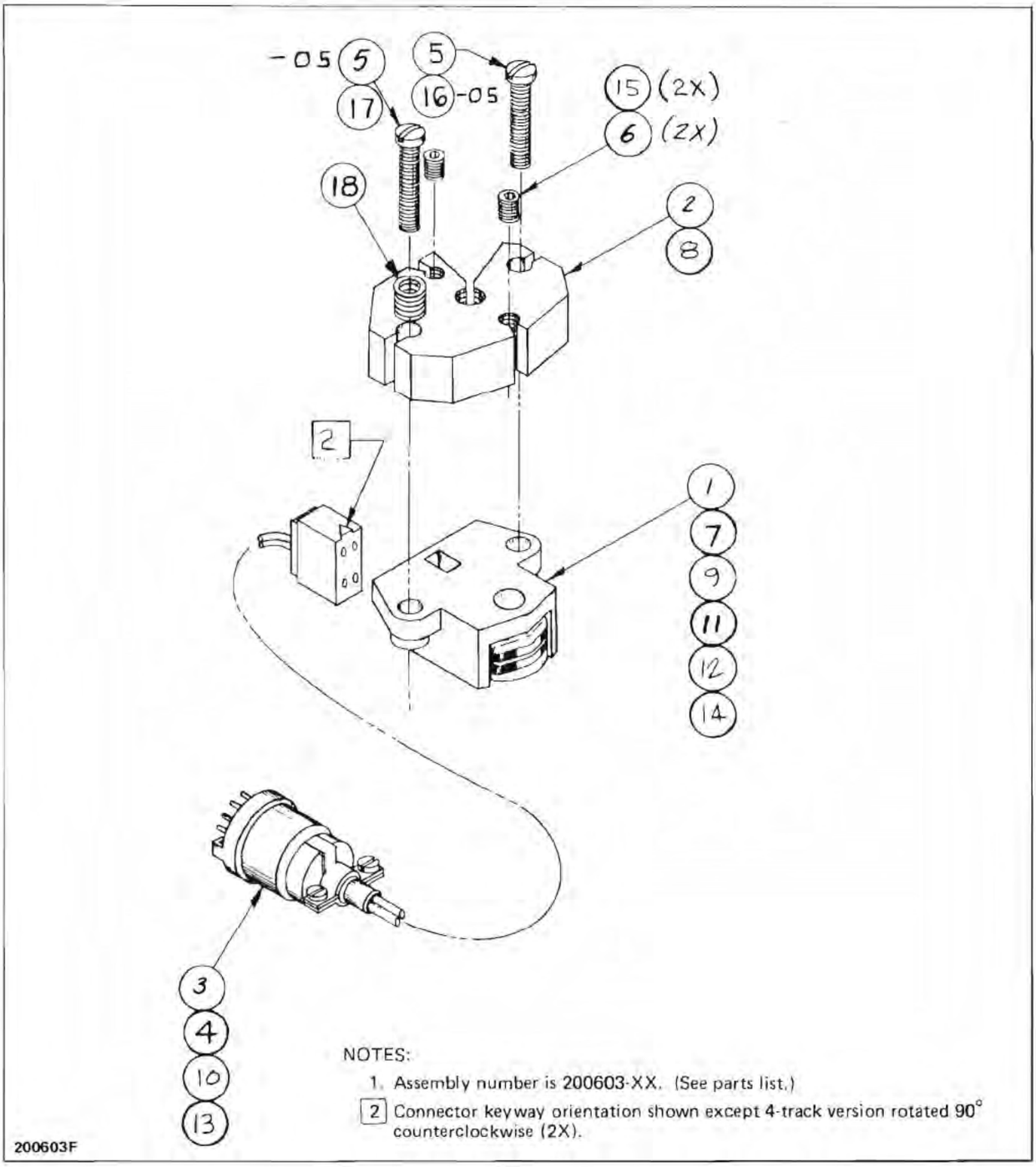

Figure 8-38. Record Head Assembly

Table 8-1. Schematic Diagrams and Parts List

FIG. & REF.	QUANTITY PER ASSEMBLY -01	-02	-03	-04	-05	-06	DESCRIPTION	PART NO.	MFR. PART NO.	CODE IDENT. NO.
8-39	Ref	-	-	-	-	-	Playback head assy, FT, 0.25 (see Fig. 8-24 for NHA)	200579-01		
	-	Ref	-	-	-	-	Playback head assy, 2 trk, 0.25 (see Fig. 8-24 for NHA)	200579-02		
	-	-	Ref	-	-	-	Playback head assy, 4 trk, stereo, 0.25 (see Fig. 8-24 for NHA)	200579-03		
	-	-	-	Ref	-	-	Playback head assy, quad, 4 trk, 0.25 (see Fig. 8-24 for NHA)	200579-04		
	-	-	-	-	Ref	-	Playback head assy, 4 trk, 0.50 (see Fig. 8-24 for NHA)	200579-05		
	-	-	-	-	-	Ref	Playback head assy, 2 trk, DIN, 0.25 (see Fig. 8-24 for NHA)	200579-06		
1	1	-	-	-	-	-	Playback head assy	200602-03		
2	1	1	1	1	-	1	Head mtg platform	200581-01		
3	-	1	-	-	-	-	Playback head assy	200602-01		
4	1	-	-	-	-	-	Head cable assy (see Fig. 8-40 for bkdwn)	502011200-01		
5	-	1	1	-	-	1	Head cable assy (see Fig. 8-40 for bkdwn)	502011200-02		
6	1	1	1	1	1	1	Screw, btn hd, 6-32 x 3/4	110074		
7	2	2	2	2	-	2	Setscrew, ovp, 6-32 x 1/4	110110		
8	-	-	-	-	1	-	Head mtg platform	200581-02		
9	-	-	-	-	1	-	Playback head, 4 trk, 0.50	180006	STP-4B32-E100	11983
10	-	-	-	-	1	-	Head cable assy (see Fig. 8-40 for bkdwn)	502011200-04		
11	-	-	1	-	-	-	Playback head assy	200602-05		
12	-	-	-	-	1	-	Playback head w/ base, DIN**	180025	PR-B2G4K-B18	11983

** Accessory

FIG. & REF.	QUANTITY PER ASSEMBLY -01	-02	-03	-04	-05	-06	DESCRIPTION	PART NO.	MFR. PART NO.	CODE IDENT. NO.
8-39							Playback head assy, (cont'd)	200579-		
13	-	-	-	1	-	-	Head cable assy	502011400-44		
14	-	-	-	1-	-	-	Playback head assy	200602-09		
15	-	-	-	-	2	-	Screw, set, ovp, 6-32 x 3/16	110360		
16	-	-	-	-	1	-	Screw, pnh, 6-32 x 0.50	110072		
17	1	1	1	1	-	1	Screw, pnh, 6-32 x 1.00	110076		
18	1	1	1	1	1	1	Spring, compression, 0.240 od x 5/16	112509		

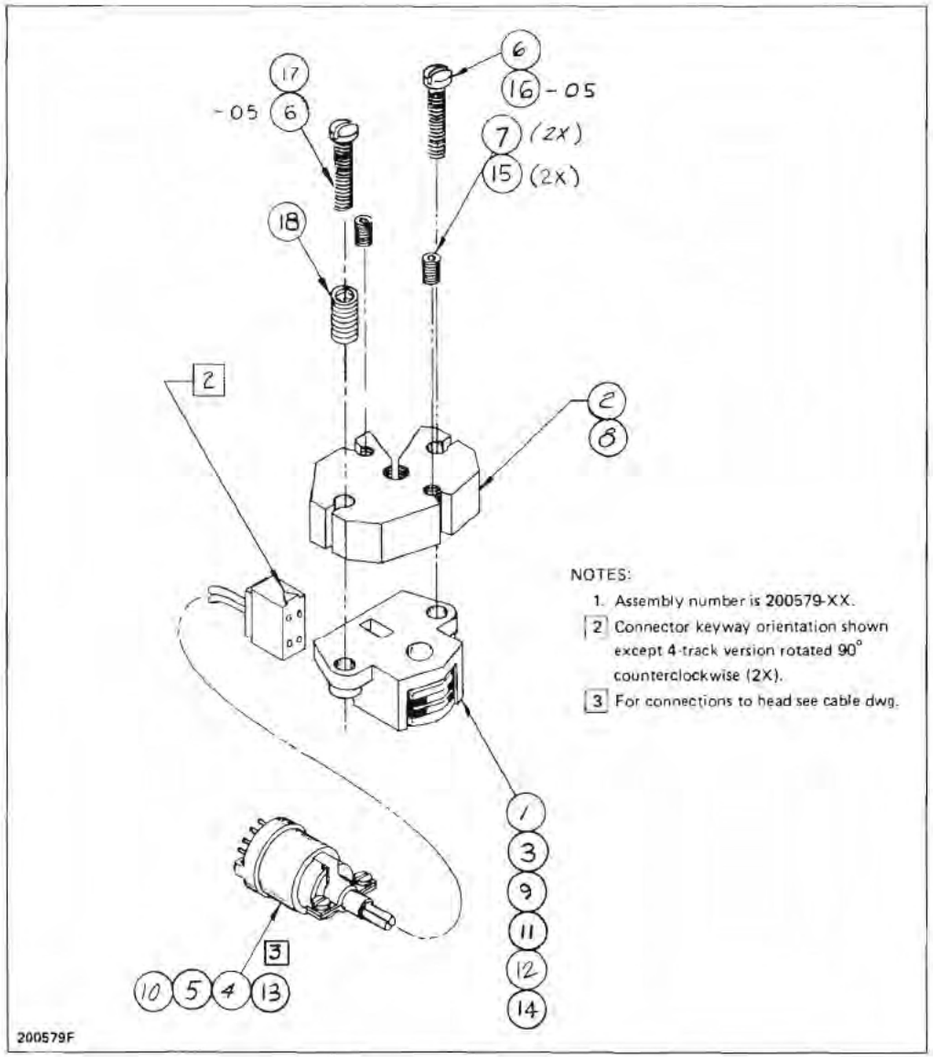

NOTES:

1. Assembly number is 200579-XX.
2. Connector keyway orientation shown except 4-track version rotated 90° counterclockwise (2X).
3. For connections to head see cable dwg.

Figure 8-39. Playback Head Assembly

Table 8-1. Schematic Diagrams and Parts List

FIG. & REF.	QUANTITY PER ASSEMBLY -01	-02	-04				DESCRIPTION	PART NO.	MFR. PART NO.	CODE IDENT. NO.
8-40	Ref	-	-				Head cable assy, FT, 0.25 (see Fig. 8-38 and 8-39 for NHA)	502011200-01		
	-	Ref	-				Head cable assy, 2 trk, 0.25 (see Fig. 8-38 and 8-39 for NHA)	502011200-02		
	-	-	Ref				Head cable assy, 4 trk, 0.50 (see Fig. 8-38 and 8-39 for NHA)	502011200-04		
1	1	1	1				Conn, plug, 9-pin	160032	126-220	02660
5	1	1	-				Cable w/ plug	161056	P139-070	11983
5	-	-	2				Cable w/ plug	161057	P139-077	11983

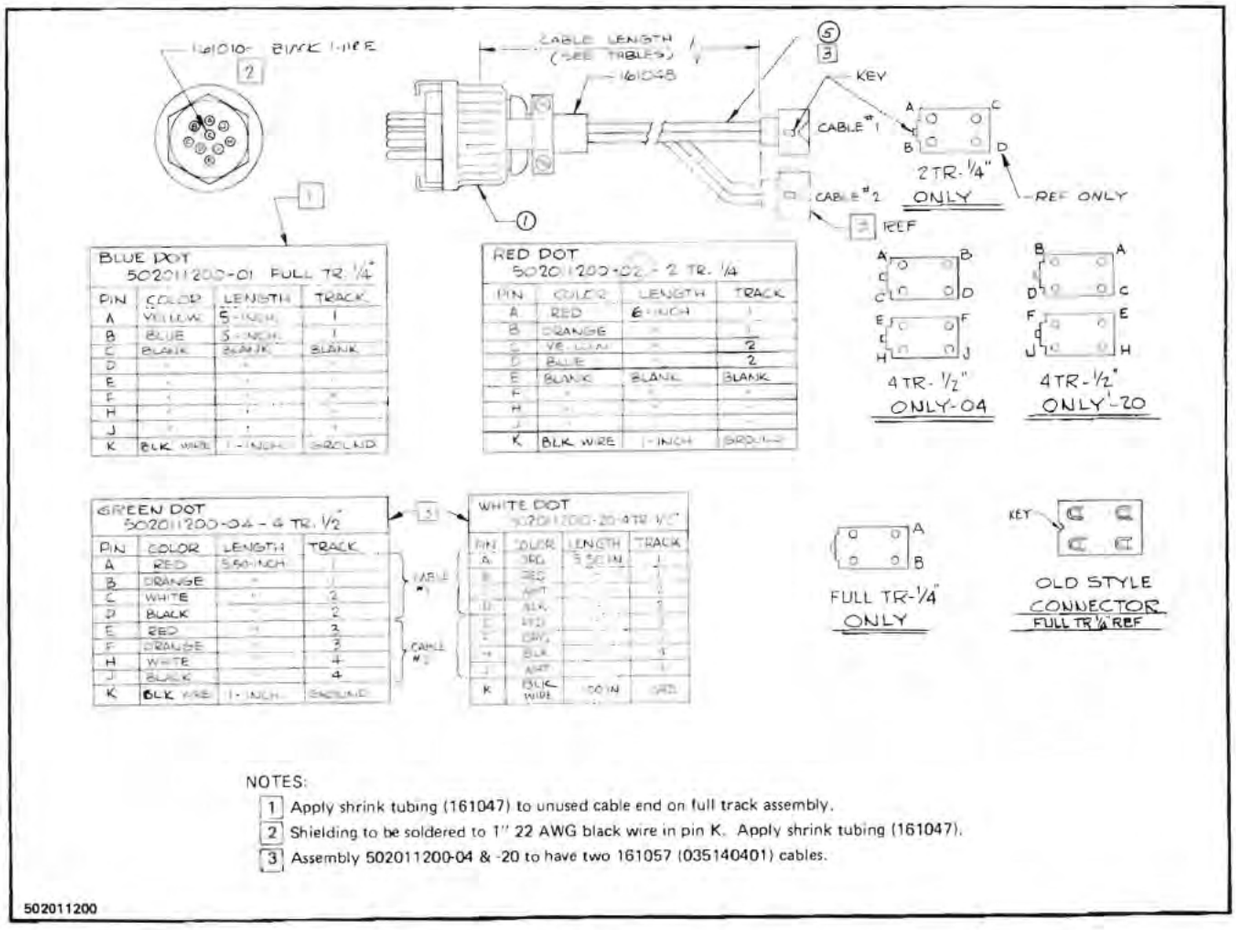

Figure 8-40. Head Cable Assembly

Table 8-1. Schematic Diagrams and Parts List

FIG. & REF.	QUANTITY PER ASSEMBLY -01	-02	-03	-04	-05		DESCRIPTION	PART NO.	MFR. PART NO.	CODE IDENT. NO.
8-41	Ref	-	-	-	-		Erase head stack assy, FT, 0.25 (see Fig. 8-24 for NHA)	200742-01		
	-	Ref	-	-	-		Erase head stack assy, 2 trk, 0.25 (see Fig. 8-24 for NHA)	200742-02		
	-	-	Ref	-	-		Erase head stack assy, stereo, 4 trk, 0.25 (see Fig. 8-24 for NHA)	200742-03		
	-	-	-	Ref	-		Erase head stack assy, quad, 4 trk, 0.25 (see Fig. 8-24 for NHA)	200742-04		
	-	-	-	-	Ref		Erase head stack assy, 4 trk, 0.50 (see Fig. 8-24 for NHA)	200742-05		
1	1	-	-	-	-		Head assy, FT, 0.25	200517-01		
2	-	1	-	-	-		Head assy, 2 trk, 0.25	200517-02		
3	-	-	1	-	-		Head assy, 4 trk, stereo, 0.25	200602-04		
4	-	-	-	-	1		Head, 4 trk, quad, 0.50	180005		
5	1	1	1	1	-		Head mtg platform	200581-01		
6	-	-	-	-	1		Head mtg platform	200581-02		
7	1	-	-	-	-		Head cable assy, FT (see Fig. 8-42 for bkdwn)	200623-01		
8	-	1	-	-	-		Head cable assy, 2 trk (see Fig. 8-42 for bkdwn)	200623-02		
9	-	-	1	-	-		Head cable assy, 4 trk, stereo, 0.25 (see Fig. 7-42 for bkdwn)	200623-03		
10	-	-	-	-	1		Head cable assy, PWB and erase, quad (see Fig. 8-43 for bkdwn)	200947-01		
11	1	1	1	1	1		Screw, pnh hd, 6-32 x 3/4	110074		
12	2	2	2	2	-		Setscrew, ovp, 6-32 x 1/4	110110		
13	-	-	-	1	-		Head cable assy, PWB and erase (see Fig. 8-43 for bkdwn)	200947-04		
14	-	-	-	1	-		Head assy, 4-54k, 0.25	200602-07		
15	-	-	-	-	2		Screw, set, ovp, 6-32 x 3/16	110360		
16	-	-	-	-	1		Screw, pnh, 6-32 x 0.50	110072		
18	1	1	1	1	-		Screw, pnh, 6-32 x 1.0	110076		
19	1	1	1	1	1		Spring, comp, 0.240 od x 5/16	112509		

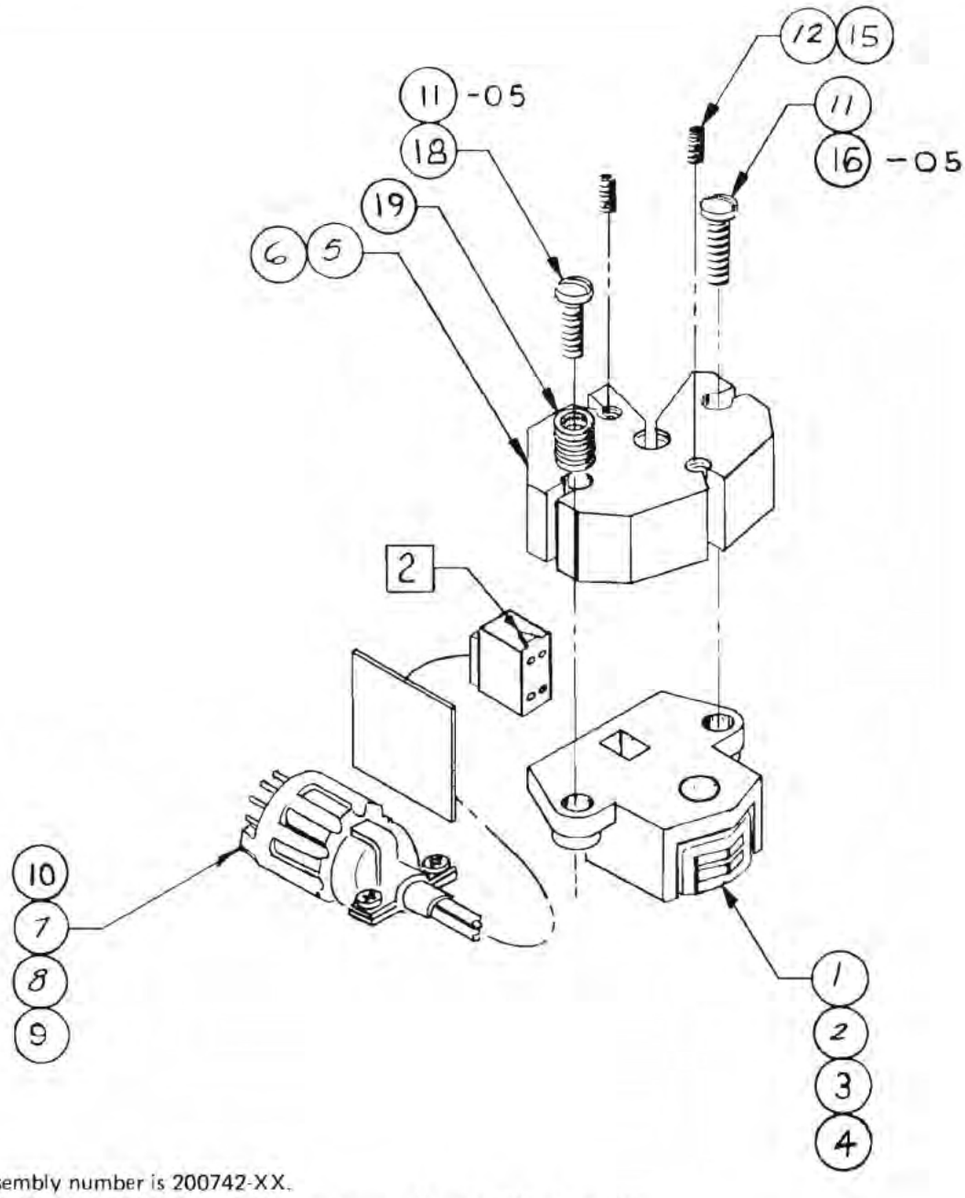

NOTES:

1. Assembly number is 200742-XX.

2 Connector keyway orientation shown except 4-track 1/2-inch version rotated 90° counterclockwise (2X).

200742E

Figure 8-41. Erase Head Assembly

Table 8-1. Schematic Diagrams and Parts List

FIG. & REF.	QUANTITY PER ASSEMBLY -01	-02	-03				DESCRIPTION	PART NO.	MFR. PART NO.	CODE IDENT. NO.
8-42	Ref						PWB and erase head cable assy, FT (see Fig. 8-41 for NHA)	200623-01		
		Ref					PWB and erase head cable assy, 2 trk	200623-02		
			Ref				PWB and erase head cable assy, 4 trk	200623-03		
1	1	1	1				Cable, w/ plug	161056	P139070	11983
2	1	1	1				PWB, erase hd matching bd	200624-01		
4 P112	1	1	1				Conn, plug, 9-pin, male	160032	126-220	02660
5 C2	1	-	-				Cap, polyest film, 0.01 uF ±10%, 80V	167028	192P1039R8	56289
6 C1, C2	-	2	-				Cap, mylar, 0.0051 uF ±10% 80V	167063	Type 3	29979
7 C1, C2	-	2	-				Cap, polyest film, 0.0047 uF ±10%, 80V	167026	192P4729R8	56289
8 C1, C2	-	-	2				Cap, mylar, 0.002 uF ±5%, 100V	167058	Type 3	29979
9 R2	1	-	-				Res, carb, 100Ω ±5%, 1/2W	150319		
10 R1, R2	-	2	-				Res, carb, 270Ω %5%, 1/2W	150324		
11 R1, R2	-	-	2				Res, carb, 220Ω ±5%, 1W	149237		

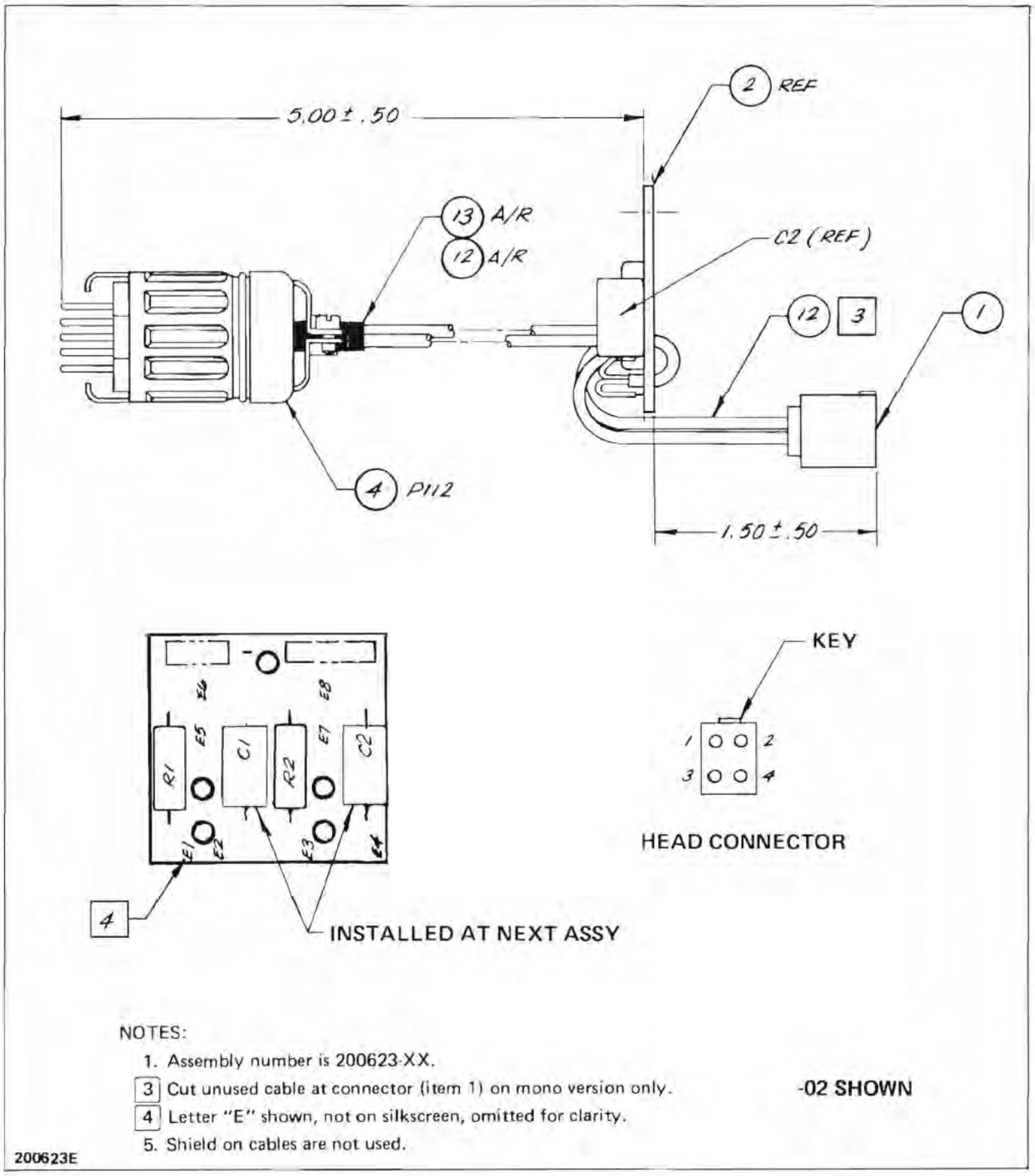

Figure 8-42. PWB and Erase Head Cable Assembly, Full-Track

Table 8-1. Schematic Diagrams and Parts List

FIG. & REF.	QUANTITY PER ASSEMBLY -01	-04					DESCRIPTION	PART NO.	MFR. PART NO.	CODE IDENT. NO.
8-43	Ref						PWB and erase head cable assy, 4 trk, 1/2" (see Fig 8-41 for NHA)	200947-01		
		Ref					PWB and erase head cable assy, 4 trk, 1/4"	200947-04		
1	2	-					Cable, w/ plug	161057	P139077	11983
2	2	2					PWB, erase hd matching bd	200624-01		
3	-	2					Cable w/ plug	161056	P139070	11983
4 P112	1	1					Conn, plug, 9-pin, male	160032	12622	02660
6 C1, C2	-	4					Cap, mylar, 0.0047 uF ±10%, 80V	167026	192P4729R8	56289
7 C1, C2	4	-					Cap, polyest film, 0.0068 uF ±10%, 80V	167046	192P6829R8	56289
9 R1, R2	4	4					Res, carb, 390Ω ±5%, 1/2W	150326		

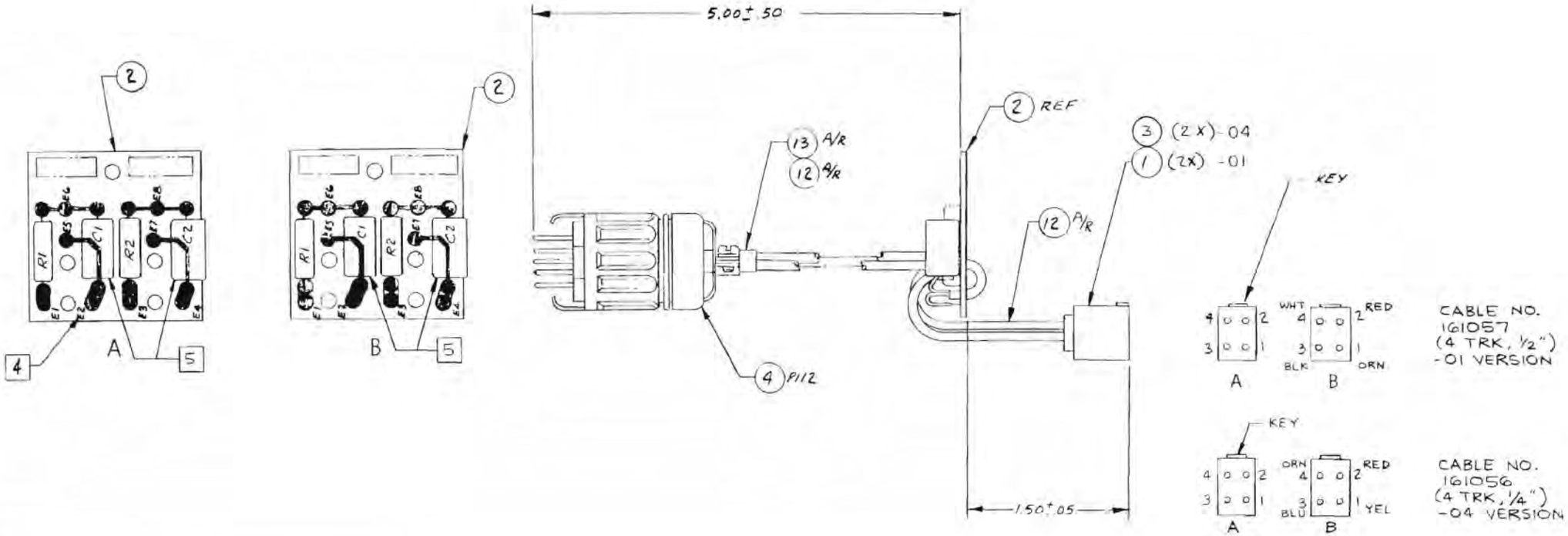

NOTES:

1. Assembly number is 200947-01 and 200947-04.
3. Letter E shown, not on silkscreen, omitted for clarity.
4. Shields on cables are not used.
5. Select item: C1 and C2 to be selected at next assy.

Figure 8-43. PWB and Erase Head Cable Assembly, 4-Track

Table 8-1. Schematic Diagrams and Parts List

FIG. & REF.	QUANTITY PER ASSEMBLY -01						DESCRIPTION	PART NO.	MFR. PART NO.	CODE IDENT. NO.
8-44	Ref						Power Supply PWA (see Fig. 8-23 for NHA)	200595-01		
2	1						Heatsink	200604-01		
CR-201, CR-202	2						Diode, 6A, 100V	151008	1N1342	84970
CR-203, CR-204	2						Diode, rectifier, 3A, 400V	153065	1N5404	05277
C201, C202	2						Cap, elect, 2000 µf, 50V	184059	[illegible]	37942
6	4						Screw, pnh, [illegible]	150166		
7	5						Lockwasher, int t, #10	171025		
C203	1						Cap, polyester, [illegible] ±10%, 100V	[illegible]	WMC[illegible]	[illegible]
R201	1						Res, comp, 4.7 k, ±10%, 2W	[illegible]		
11	2						Solder lug, int t, tinned, #10	[illegible]		
12	1						Washer, flat, 1/2 OD, #10	[illegible]		

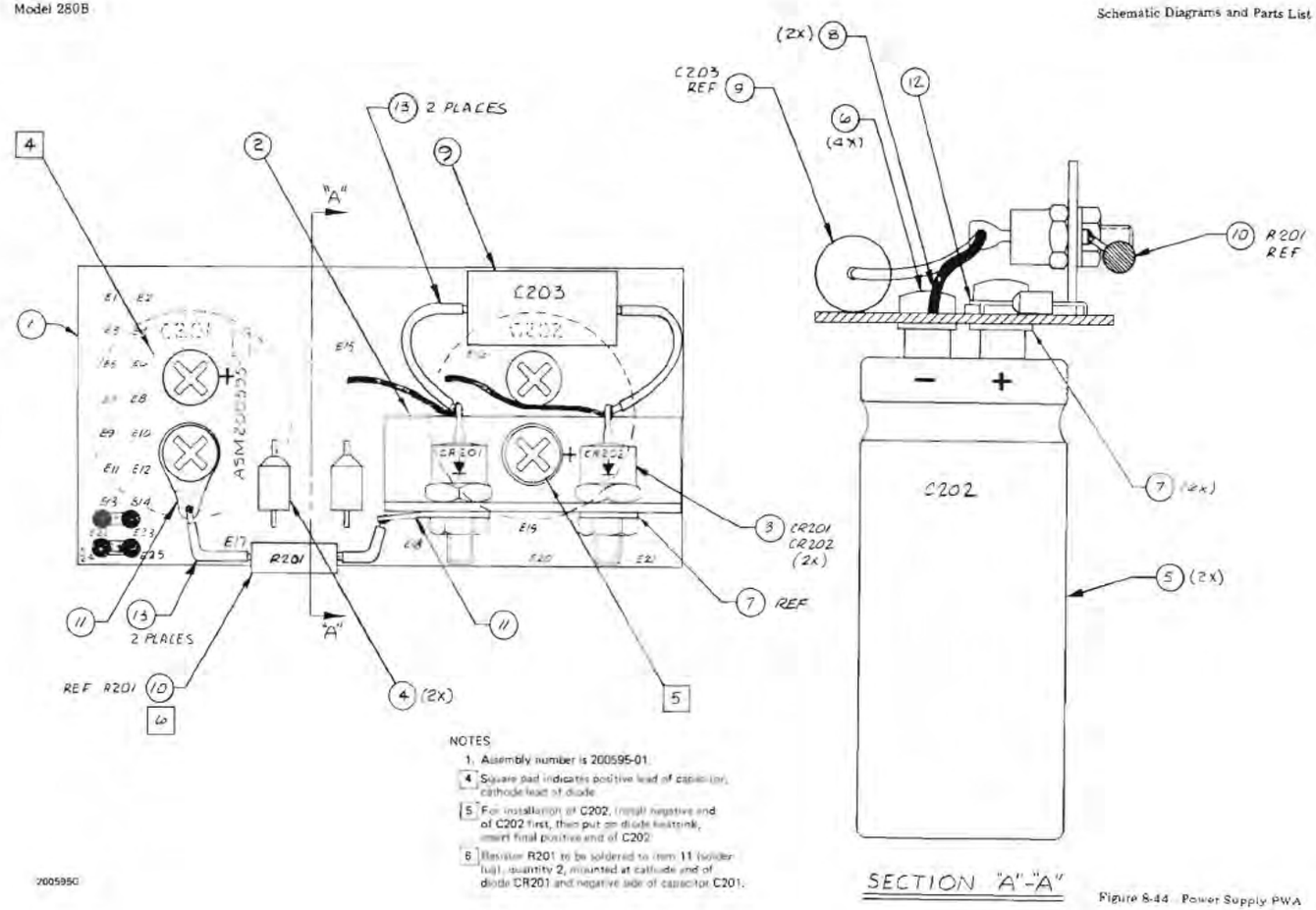

NOTES:

1. Assembly number is 200595-01.

4 Square pad indicates positive lead of capacitor, cathode lead of diode.

5 For installation of C202, install negative end of C202 first, then put on diode heatsink, insert final positive end of C202.

6 Resistor R201 to be soldered to item 11 (solder lug), quantity 2, mounted at cathode end of diode CR201 and negative side of capacitor C201.

Figure 8-44. Power Supply PWA

Table 8-1. Schematic Diagrams and Parts List

FIG. & REF.	QUANTITY PER ASSEMBLY -01						DESCRIPTION	PART NO.	MFR. PART NO.	CODE IDENT. NO.
8-45	Ref						Torque motor assy (see Figs. 8-28 and 8-29 for NHA)	200565-01		
1	1						Torque motor	040010002	A74NKP-10A	04810
2	1						Conn. plug, 9-hole	160003	1625-9P	27264
3	2						Term, qdisc, 0.250, 18-22 ga	160016	AA1140	98410
4	6						Term, pin, 0.062 dia, male, 18-22 ga	160028	1560	27264
5	2						Conn, butt end, 2-pin, 0.250	160041	321325	00779

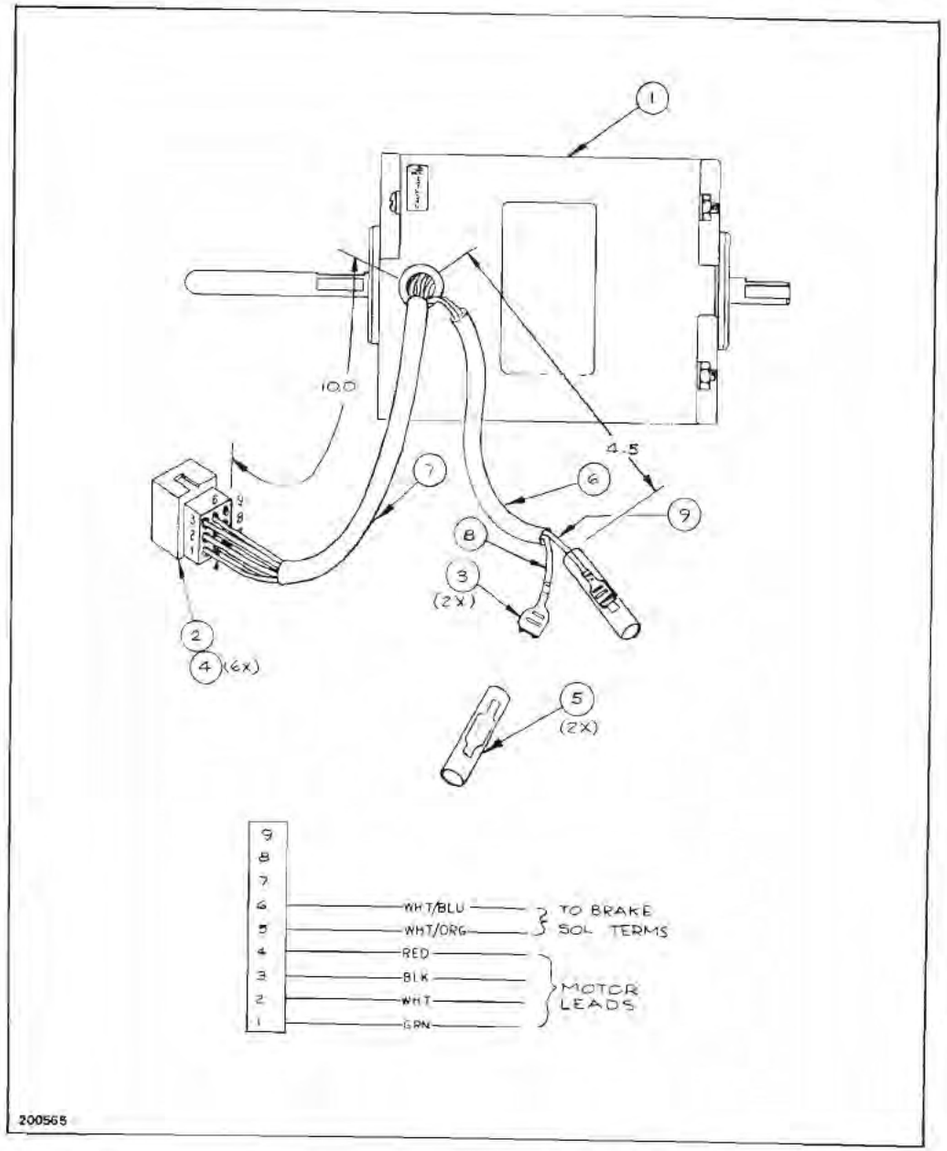

Figure 8-45. Torque Motor Assembly

Table 8-1. Schematic Diagrams and Parts List

FIG. & REF.	QUANTITY PER ASSEMBLY						DESCRIPTION	PART NO.	MFR. PART NO.	CODE IDENT. NO.
8-46	Ref						Torque motor brake plate assy (see Figs. 8-28 and 8-29 for NHA)	502060300		
1	1						Torque motor brake plate	502060301		
2	2						Spring, brake plate	502060303		
3	4						Spacer, 8-32 x 1-1/4	112068	8368	83330
4	4						Screw, flh, 8-32 x 1/2	110032		
5	2						Screw, flh, 8-32 x 1.12	110037		
6	2						Nut, hex, 8-32	111054		
7	2						Nut, hex, elastic stop, 8/32	111048		

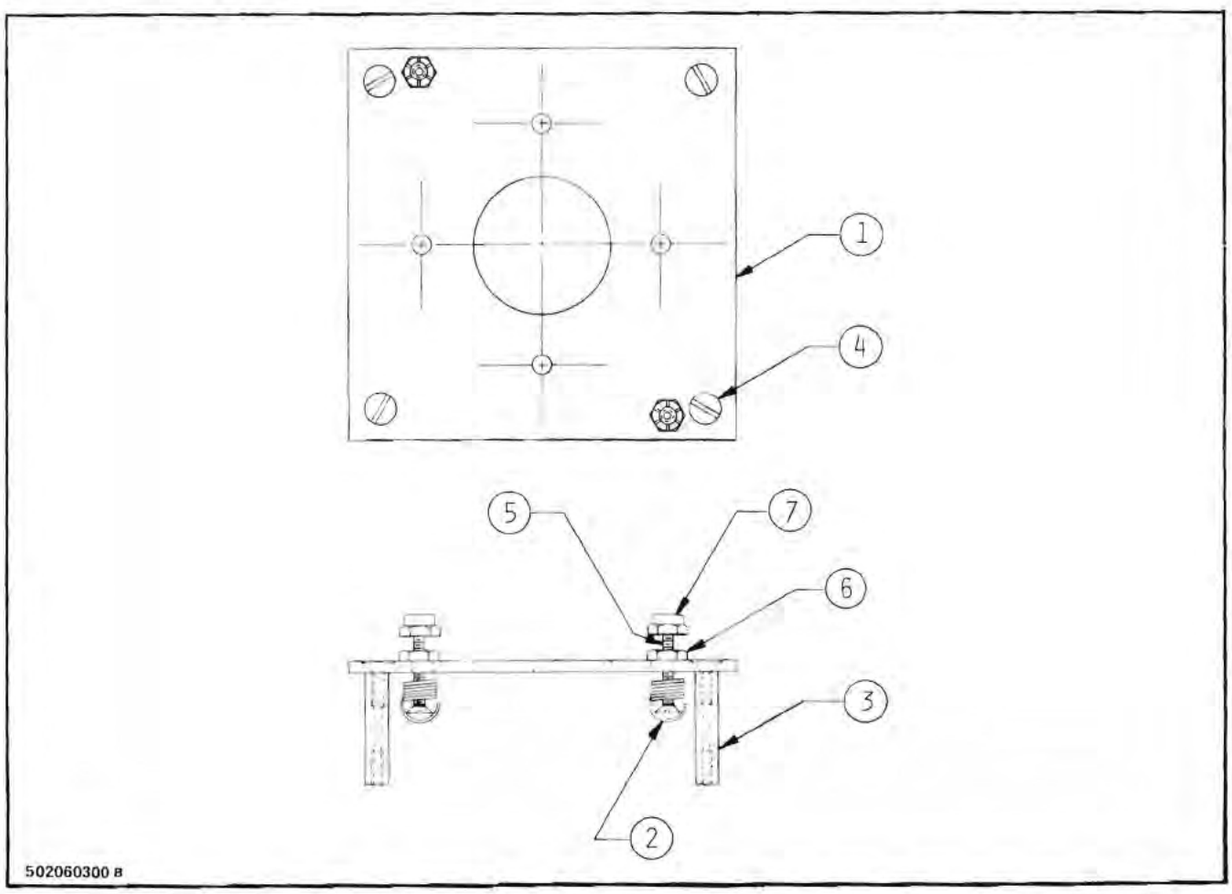

Figure 8-46. Torque Motor Brake Plate Assembly

Table 8-1. Schematic Diagrams and Parts List

FIG. & REF.	QUANTITY PER ASSEMBLY -01						DESCRIPTION	PART NO.	MFR. PART NO.	CODE IDENT. NO.
P-47	Ref						Motion direction sensor PWA (see Fig. 8-28 for NHA)	201620-01		
R2	1						Res, carb, 220Ω ±5%, 1/4W	149118		
R1	1						Res, carb, 100 kΩ ±5%, 1/4W	149073		
7 Q1	1						Photon coupler	162319	H13A-1	08806
8 P108	1						Conn, rcpt, 3-hole	160045	1625-3R1	27264
9 Ref P108	3						Term, pin, 0.062 dia, female	160029	1561	27264
14	2						Screw, pnh, 4-40 x 5/16	110306		
15	2						Lockwasher, int t, #4	111022		
16	2						Nut, hex, 4-40 x 1/4, small pattern	111125		

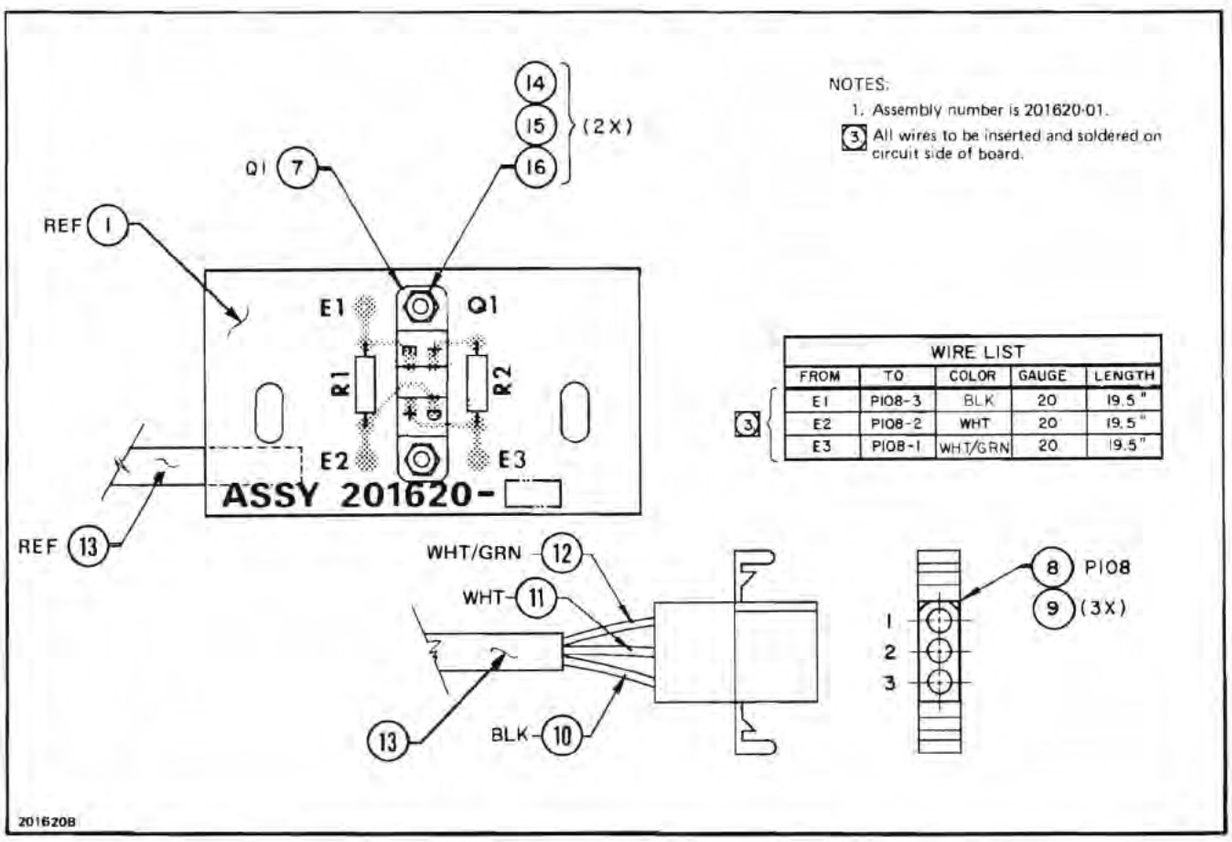

Figure 8-47. Motion Direction Sensor PWA

Table 8-1. Schematic Diagrams and Parts List

FIG. & REF.	QUANTITY PER ASSEMBLY						DESCRIPTION	PART NO.	MFR. PART NO.	CODE IDENT. NO.
8-48	Ref						Solenoid brake plate assy (see Figs. 8-28 and 8-29 for NHA)	502060200		
1	1						Solenoid brake plate	502060201		
2	1						Felt shim	502060203		
3	1						Solenoid assy, modified	502060405-01		
	1						. Solenoid body	162099		
	2						. Term, qdisc, 0.250	160016	AA-1140	98410
4	2						Screw, flh, 8-32 x 3 in.	110039		

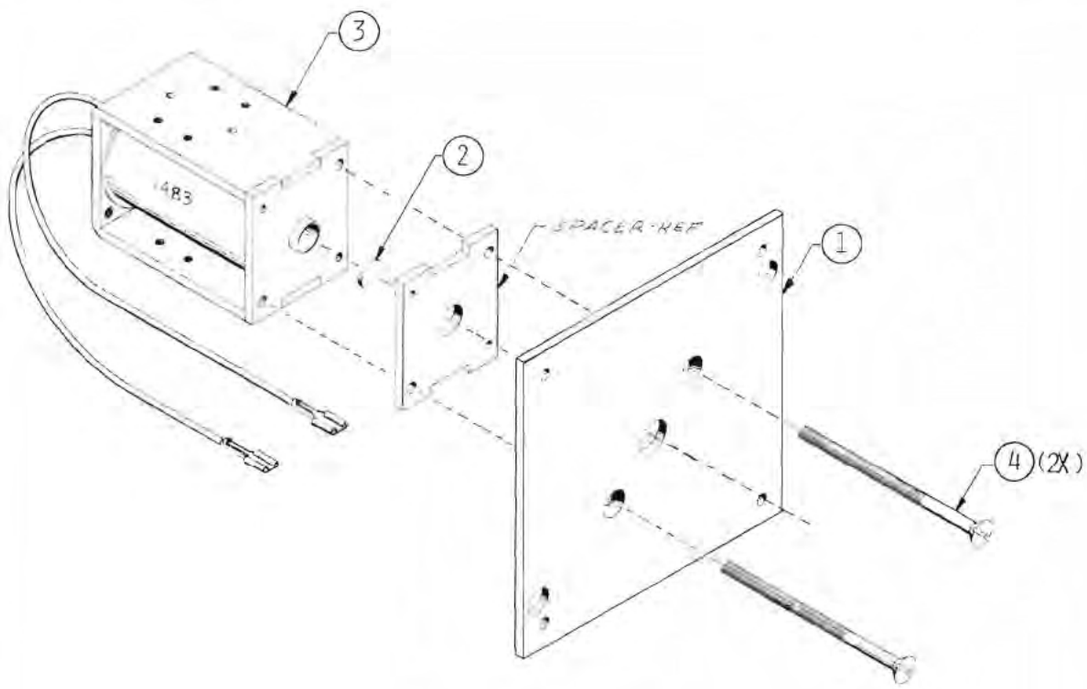

NOTE:
Align hole in brake plate with plunger hole in solenoid using fixture.

502060200

Figure 8-48. Solenoid Brake Plate Assembly

Table 8-1. Schematic Diagrams and Parts List

FIG. & REF.	QUANTITY PER ASSEMBLY -01						DESCRIPTION	PART NO.	MFR. PART NO.	CODE IDENT. NO.
8-49	Ref						Brake plate assy (see Figs. 8-28 and 8-29 for NHA)	201704-01		
1	1						Brake plate	502060401		
2	1						Felt pad	502060402		
3	1						Solenoid, modified (plunger)	502060405		
4	1						Screw, pnh, 8-32 x 0.25	110168		
5	0.01 oz						Loctite	112410	222	05972
6	1						Shoe, cmpsn	201705-01		

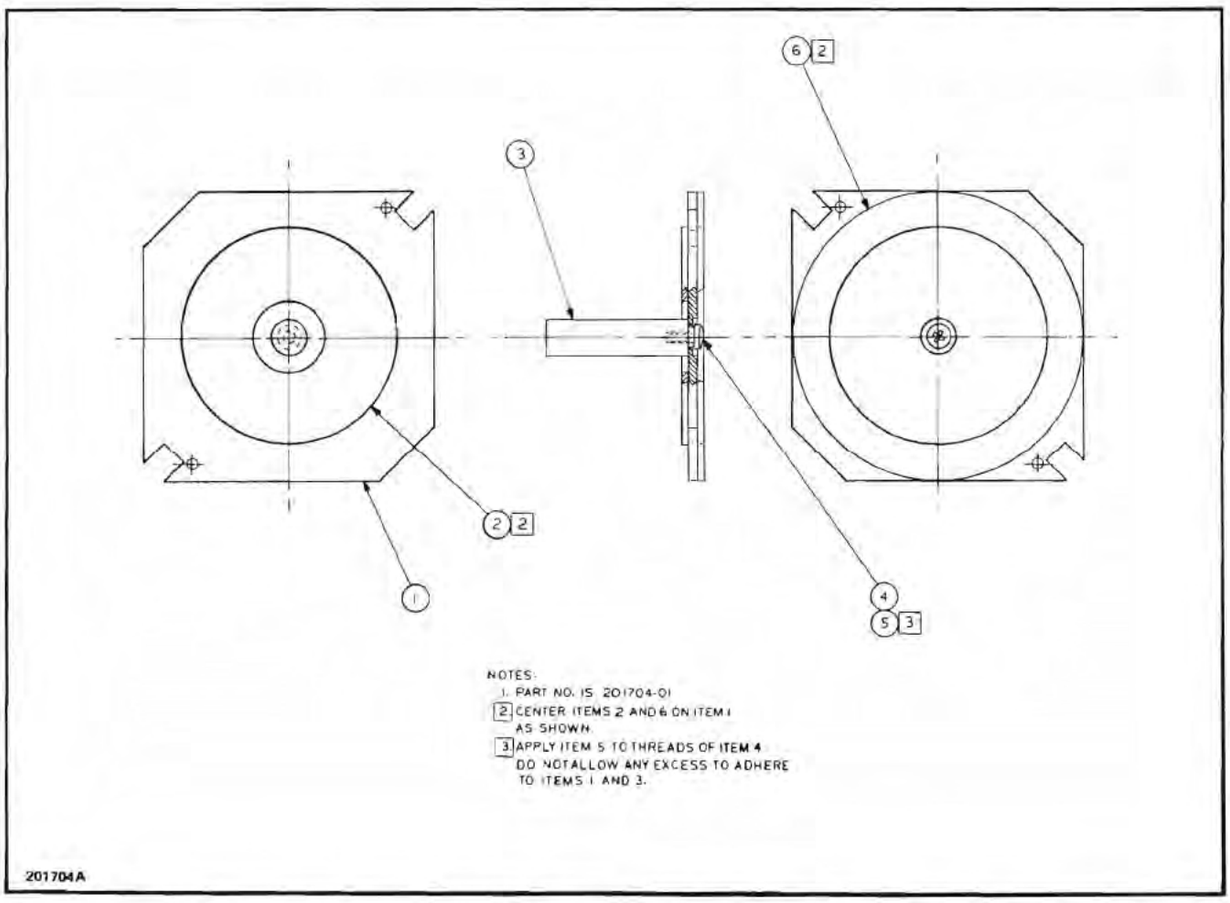

Figure 8-49. Brake Plate Assembly

Table 8-1. Schematic Diagrams and Parts List

FIG. & REF.	QUANTITY PER ASSEMBLY -01	-02	-04				DESCRIPTION	PART NO.	MFR. PART NO.	CODE IDENT. NO.
8-50	Ref	-	-				Electronics assy, primary, chan 1, FT (see Fig. 8-14 for NHA)	200576-01		
	-	Ref	-				Electronics assy, primary, chan 1 and 2 (see Fig. 8-14 for NHA)	200576-02		
	-	-	Ref				Electronics assy, primary, chan 1, 1/2 trk (see Fig. 8-14 for NHA)	200576-04		
1	1	-	1				Electronics chassis sub-assy, chan 1 (see Fig. 8-52 for bkdwn)	200556-01		
2	-	1	-				Electronics chassis sub-assy, chan 1 and 2 (see Fig. 8-52 for bkdwn)	200556-02		
4	1	1	1				Reg and bias osc ampl PWA (see Fig. 8-55 for bkdwn)	200470-01		
5	-	2	1				Rec/PB cont panel assy (see Fig. 8-56 for bkdwn)	200548-01		
6	1	-	-				Rec, PB cont panel assy FT (see Fig. 8-56 for bkdwn)	200548-02		
11	1	-	1				Panel, blank	200794-01		
12	1	-	1				Cover plate, blank panel	200795-01		
13	4	4	4				Screw, filhd, 4-40 x 5/16	110316		
14	1	-	1				Stop, sync, switch	200975-01		
15	1	-	1				Nut, hex, 2-56 UNC	111051		
20*	(1)	(2)	(1)				Rec/PB equalization PWA, NAB, 3.75 - 7.5 in/s (see Fig. 8-57 for bkdwn)	200605-01		
21*	(1)	(2)	(1)				Rec/PB equalization PWA, NAB, 7.5 - 15.0 in/s (see Fig. 8-57 for bkdwn)	200605-02		
22*	(1)	(2)	(1)				Rec/PB equalization PWA, IEC, 7.5 - 15.0 in/s (see Fig. 8-57 for bkdwn)	200605-03		
23*	(1)	(2)	(1)				Rec/PB equalization PWA, NAB 15 in/s, AES 30 in/s (see Fig. 8-57 for bkdwn)	200605-04		
24*	(1)	(2)	(1)				Rec/PB equalization PWA, IEC 15 in/s, AES 30 in/s (see Fig. 8-57 for bkdwn)	200605-05		
25*	(1)	(2)	(1)				Rec/PB equalization PWA, DIN/IEC 3.75 - 7.5 in/s (see Fig. 8-57 for bkdwn)	200605-06		
							*Select as required.			

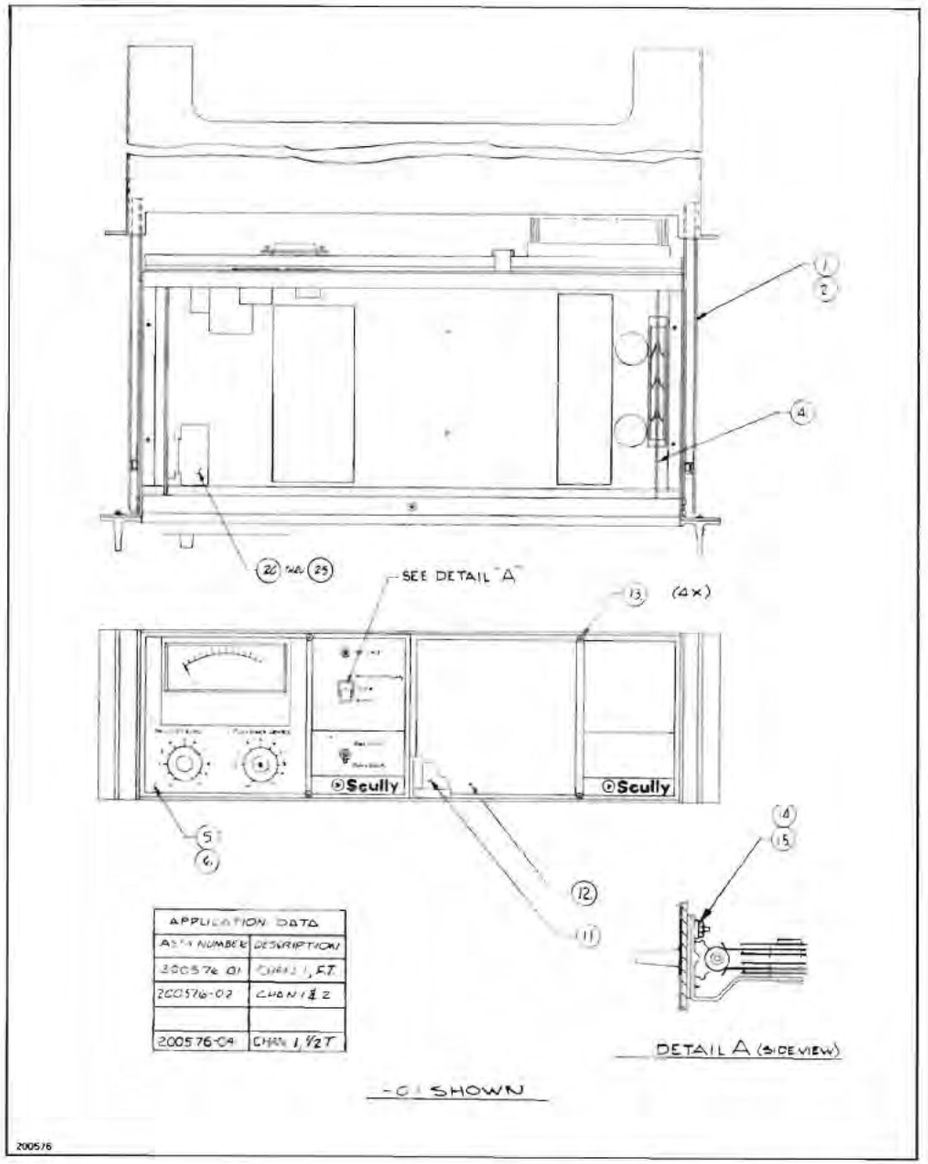

Figure 8-50. Electronics Assembly, Primary

Table 8-1. Schematic Diagrams and Parts List

FIG. & REF.	QUANTITY PER ASSEMBLY -01						DESCRIPTION	PART NO.	MFR. PART NO.	CODE IDENT. NO.
8-51†	Ref						Electronics assy, secondary chan 3 and 4 (see Fig. 8-14 and 8-63 for NHA)	201740-01		
1	1						Electronics chassis subassy chan 3 and 4 (see Fig. 8-52 for bkdwn)	200556-04		
2	1						Bias amplifier PWA (see Fig. 8-53 for bkdwn)	201815-01		
3	2						Rec/PB cont panel assy (see Fig. 8-56 for bkdwn)	200548-01		
4*	(2)						Rec/PB equalization PWA, NAB 3.75 - 7.5 in/s (see Fig. 8-57 for bkdwn)	200605-01		
5*	(2)						Rec/PB equalization PWA, NAB 7.5 - 15.0 in/s (see Fig. 8-57 for bkdwn)	200605-02		
6*	(2)						Rec/PB equalization PWA, IEC 7.5 - 15.0 in/s (see Fig. 8-57 for bkdwn)	200605-03		
7*	(2)						Rec/PB equalization PWA, NAB 15 in/s, AES 30 in/s (see Fig. 8-57 for bkdwn)	200605-04		
8*	(2)						Rec/PB equalization PWA, IEC 15 in/s, AES 30 in/s (see Fig. 8-57 for bkdwn)	200605-05		
9*	(2)						Rec/PB equalization PWA, DIN/IEC 3.75 - 7.5 in/s (see Fig. 8-57 for bkdwn)	200605-06		
10	4						Screw, filh, 4-40 x 5/16	110316		

*Select as required.

†This Fig. not illustrated.

Table 8-1. Schematic Diagrams and Parts List

FIG. & REF.	QUANTITY PER ASSEMBLY -01	-02	-04				DESCRIPTION	PART NO.	MFR. PART NO.	CODE IDENT. NO.
8-52	Ref	-	-				Electronics chassis subassy, mono (see Fig. 8-50 for NHA)	200556-01		
	-	Ref	-				Electronics chassis subassy, stereo (see Fig. 8-50 for NHA)	200556-02		
	-	-	Ref				Electronics chassis subassy, quad (see Fig. 8-50 for NHA)	200556-04		
1	1	1	1				Rack mtg bracket	200423-01		
2	1	1	1				Side plate L.H.	200425-01		
3	1	1	1				Side plate R.H.	200425-02		
4	1	1	1				Mount, back panel	200432-01		
5	1	1	1				Bottom plate	200452-01		
6	1	1	1				Trim, control panel, bottom	200464-01		
7	1	1	1				Trim, control panel, top	200464-02		
8	2	2	2				Handle, control panel	200478-01		
9	2	2	2				Latch, chassis slide	200736-01		
10	1pr	1pr	1pr				Chassis slide	200521	C245-153	16499
11	3	3	3				Washer, flat #6	111003		
12	17	17	17				Screw, pnh, 6-32 x 3/8	110170		
13	8	8	8				Screw, pnh, 8-32 x 3/8	110171		
14	8	8	8				Screw, thread cutting pnh, 6-32 x 1/2	110186		
15	3	3	3				Nut, kep, ext lockwasher, 6-32	111063		
16	4	4	4				Screw, pnh, 4-40 x 3/8	110172		
17	22	22	22				Lockwasher, int t, #6	111023		
18	10	10	10				Nut, kep, ext lockwasher, 8-32	111064		
19	4	4	4				Lockwasher, int t, #4	111022		
21	2	2	2				Screw, flh, 6-32 x 3/8	110238		
22	1	-	-				Motherboard assy, mono (see Fig. 8-54 for bkdwn)	200465-01		
23	-	1	-				Motherboard assy, stereo (see Fig. 8-54 for bkdwn)	200465-02		

Table 8-1. Schematic Diagrams and Parts List

FIG. & REF.	QUANTITY PER ASSEMBLY -01	-02	-04				DESCRIPTION	PART NO.	MFR PART NO.	CODE IDENT. NO.
8-52							Electronics chassis subassy (continued)	200556-		
24	-	-	1				Motherboard assy, quad (see fig. 8-54 for bkdwn)	200465-04		
25	4	4	8				Screw, bth hd, 8 x 32 x 3/8	110239		
26	1	1	-				Heatsink & cover plate assy	200552-01		
	1	1	-				. Heatsink	200529-01		
	1	1	-				. Plate, cover	200428-01		
	1	1	-				. Screw, pnh, 6-32 x 3/8	110110		
	2	2	-				. Screw, pnh, 4-40 x 1/2	110202		
	2	2	-				. Nut, plog, 4-40	111083		
	A/R	A/R	-				. Compound, heatsink silicone	162190	340	71984
	1	1	-				. Xstr, power	152029	MJE 3055	04713
27	-	-	1				Plate, cover	200886-01	RADM125	07936
29 Ref 2124	1	1	-				Guide, PWB	162153	RADM125	07936
32	1	1	1				Strip, control panel	200739-01		

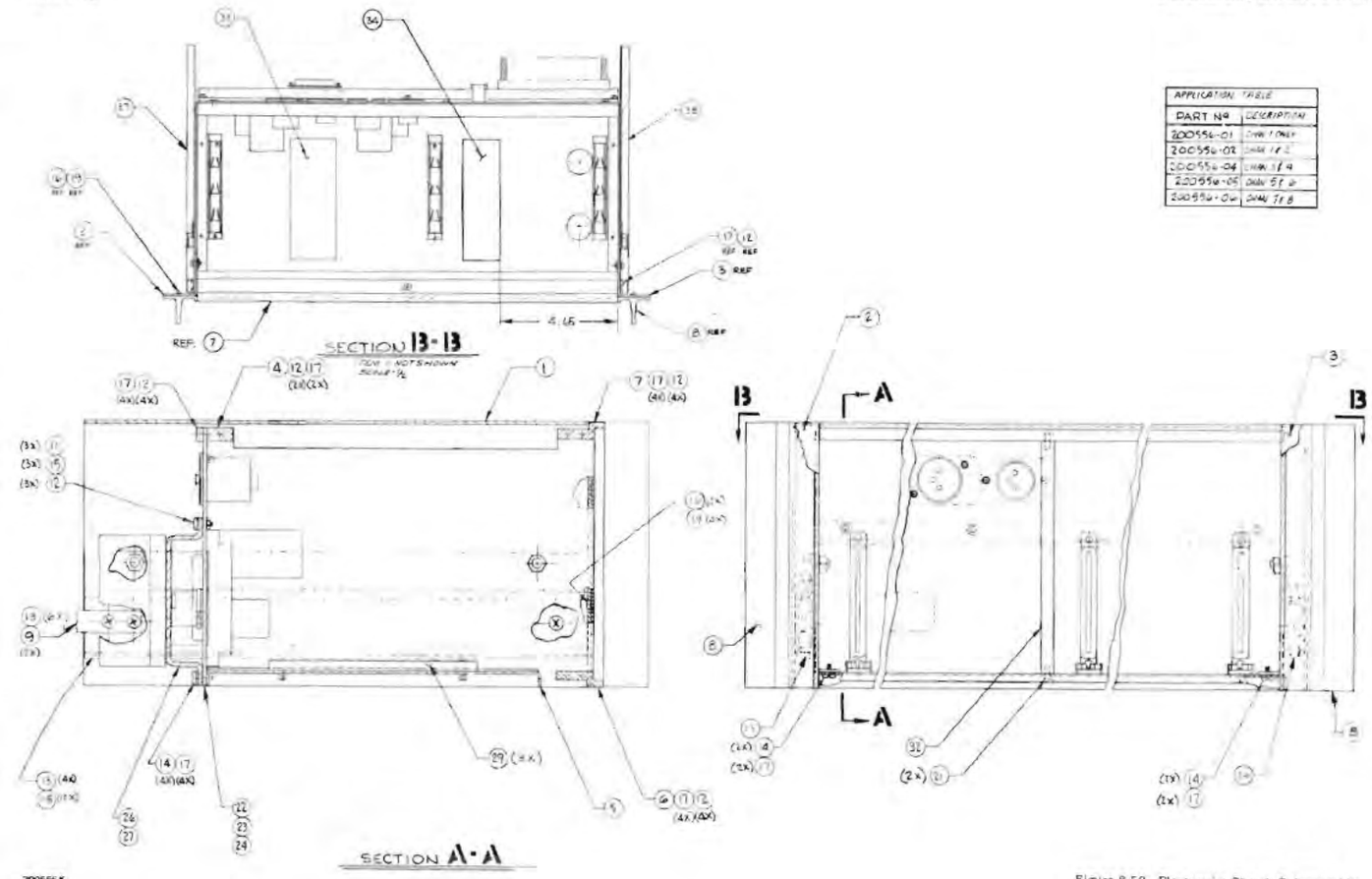

APPLICATION TABLE	
PART Nº	DESCRIPTION
200556-01	DWG 1 ONLY
200556-02	DWG 1 & 2
200556-04	DWG 1 & 4
200556-05	DWG 5 & 6
200556-06	DWG 7 & 8

Figure 8-52. Electronics Chassis Subassembly

Table 8-1. Schematic Diagrams and Parts List

FIG. & REF.	QUANTITY PER ASSEMBLY -01						DESCRIPTION	PART NO.	MFR. PART NO.	CODE IDENT. NO.
8-53	Ref						Bias amplifier PWA (see Fig. 8-51 for NHA)	201815-01		
R14	1						Res, carb, 330Ω ±5%, 1/4W	149095		
R2, R3	2						Res, carb, 390Ω ±5%, 1/4W	149054		
R10, R11, R16	3						Res, carb, 1 kΩ ±5%, 1/4W	149011		
R12	1						Res, carb, 3.3 kΩ ±5%, 1/4W	149091		
R5	1						Res, carb, 4.7 kΩ ±5%, 1/4W	149056		
R13	1						Res, carb, 8.2 kΩ ±5%, 1/4W	149074		
R7	1						Res, carb, 27 kΩ ±5%, 1/4W	149047		
R4, R15	2						Res, carb, 1Ω ±5%, 1/4W	149136		
R1, R9	2						Res, carb, 4.7Ω ±5%, 1/2W	150303		
R8	1						Res, carb, 1.5 kΩ ±5%, 1/2W	150333		
R6	1						Res, var, 5 kΩ	156035	3359W502	80294
C8	1						Cap, polyest film, 0.001 μF ±10%, 200V	167038	192P10292	56289
C5	1						Cap, met polyest flat film, 0.47 μF ±10%, 250V	167021	C280AE/A470K	80031
C3	1						Cap, met polyest flat film, 0.1 μF ±20%, 250V	167019	280AE/P100K	80031
C6	1						Cap, ta, rdl ld, 2.2 μF ±20%, 35V	171006	TAG-20-2.2/35-20	71468
C2, C7	2						Cap, elctlt, 47 μF, 25V	164009	ET470X025A4	80031
C1	1						Cap, cer disc, 10 pF ±10%, 100V	163049	Type CM	91418
Q1, Q5	2						Xstr	152018	BC409C	73445
Q3	1						Xstr	152046	2N2905-A	04713
Q1	1						Xstr	152047	D40D7	03508
Q2	1						Xstr	152048	D41D7	03508

Table 8-1. Schematic Diagrams and Parts List

FIG. & REF.	QUANTITY PER ASSEMBLY -01						DESCRIPTION	PART NO.	MFR. PART NO.	CODE IDENT. NO.
8-53							Bias amplifier PWA (cont'd)	201815-01		
Ref Q3	1						Transipad, xstr spacer	152083		
Ref Q1, Q2	1						Heatsink	200530-01		
CR1, CR2	2						Diode	153001		
T1	1						Xfmr, bias input	201812-01		
TP1	1						Test point, yel	162176	1177	71002
TP2	1						Test point, blk	162175	1177	71002
TP3	1						Test point, red	162174	1177	71002
L1	1						Inductor, 10 uH ±10%	149085	9320-30	43543
Ref Q1, Q2	2						Screw, pnh, 4-40 x 3/8	110172		
39	2						Washer, flat, #4	111002		
40	2						Nut, hex, 4-40 UNC	111052		
41	2						Lockwasher, int t, #4	111022		
42	A/R						Compound, heatsink, silicone	162180	340	71984
43	2						Washer, insulating fiber	111138	2317-F120	06540
C4	1						Cap, mono axial, 0.1uF ±20%, 50V	163120	8005-50Z 5UO-104M	18796

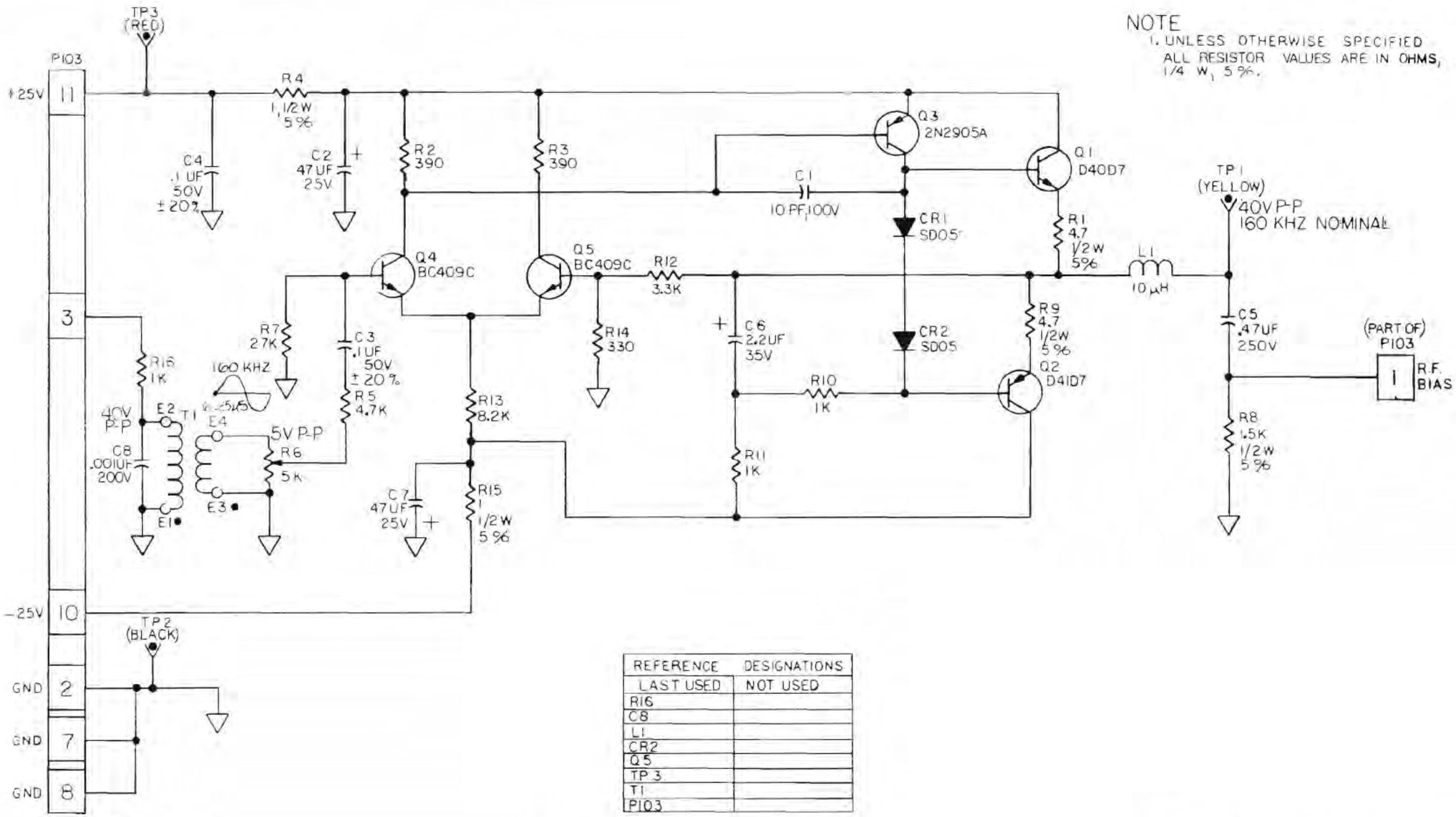

REFERENCE DESIGNATIONS	
LAST USED	NOT USED
R16	
C8	
L1	
CR2	
Q5	
TP 3	
T1	
P103	

201817C

Figure 8-53. Bias Amplifier, Schematic Diagram

Table 8-1. Schematic Diagrams and Parts List

FIG. & REF.	QUANTITY PER ASSEMBLY -01	-02	-04				DESCRIPTION	PART NO.	MFR. PART NO.	CODE IDENT. NO.
8-54	Ref	-	-				Motherboard PWA, mono (see Fig. 8-52 for NHA)	200465-01		
	-	Ref	-				Motherboard PWA, 2 channel (see Fig. 8-52 for NHA)	200465-02		
	-	-	Ref				Motherboard PWA, 4 channel (see Fig. 8-52 for NHA)	200465-04		
R3, R8	-	2	2				Res, carb, 470Ω ±5% 1/4W	149010		
R1, R2, R5, R6	2	4	4				Res, carb, 1 kΩ ±5%, 1/4W	149011		
R4, R7	-	2	2				Res, carb, 2.7 kΩ ±5%, 1/2W	150336		
C1, C4	-	2	2				Cap, ta, rdl ld, 10 μF ±20%, 35V	171013	TAG-20-10/ 35-20	71468
C2, C3	-	2	2				Cap, cer disc, 0.01 μF +80%, -20%, 25V	163015	Type M-25	91418
Ref J125	25	25	25				Contact, straight, pc, skt	160143	030-1990-000	71468 or 71785
K1, K2	-	2	2				Relay, 3.2 kΩ, 24 Vdc	156061	R10-E2816-1	77342
T1, T2	1	2	2				Xfmr, 15 kΩ to 600 Ω	157005	A-65-J	71468
J121, J122, J124	2	3	3				Conn, PWB edge, 12 contacts, double readout	160098	50-24B-10	71785
J117, J119	1	2	2				Conn, 3 contact	160077	XLR-3-31	71468
J118, J120	1	2	2				Conn, 3-pin	160066	XLR-3-32	71468
J127	1	1	-				Conn, 3-pin	160020	2139-3-2	27264
J126	1	1	-				Conn, plug, 9-pin	160003	1625-9P	27264
J123	1	1	1				Conn, rcpt, 9-pin	160004	1625-9R	27264
J125	1	1	1				Conn, rcpt, 25-contact	160144	DBC-25S1-FO	71468
Ref J125	1 kit	1 kit	1 kit				Slide lock post (2 per kit)	160140	D53018	71468
J115, J116	1	2	2				Jack, earphone, PC mount	162192	N112B	82389

Table 8-1. Schematic Diagrams and Parts List

FIG. & REF.	QUANTITY PER ASSEMBLY -01	-02	-04				DESCRIPTION	PART NO.	MFR. PART NO.	CODE IDENT. NO.
8-54							Motherboard PWA (cont'd)	200465-		
Ref J127	3	3	-				Term, sq wire, crimp style	160001	2478	27264
Ref J126	9	9	-				Term, pin, male, 0.062 dia, PC mount	160107	SD1778	27264
Ref J123	9	9	9				Term, pin, female, 0.062 dia, PC mount	160108	SD1779	27264
33	1	-	-				Plug, plastic, 0.812 dia	162238	P-812	95760
35	1	-	-				Plug, plastic, 1.00 dia	162239	P-1000	95760
Ref J115 J116	-	1	1				Plate, headphone jack	200858-01		
37	2	2	2				Screw, pnh, 4-40 unc x 1/4	110173		
38	4	8	8				Screw, flh, 4-40 x 3/8	110011		
39	4	8	8				Nut, hex, machine, 4-40 unc	111052		
40	1	2	2				Washer, flat, 0.38 id	111007		
41	6	10	10				Lockwasher, int t, #4	111022		
42	6	10	10				Washer, flat, #4	111002		
44	2	2	2				Spacer, brass, 3/16 hex thd, 4-40 x 0.38	112257		

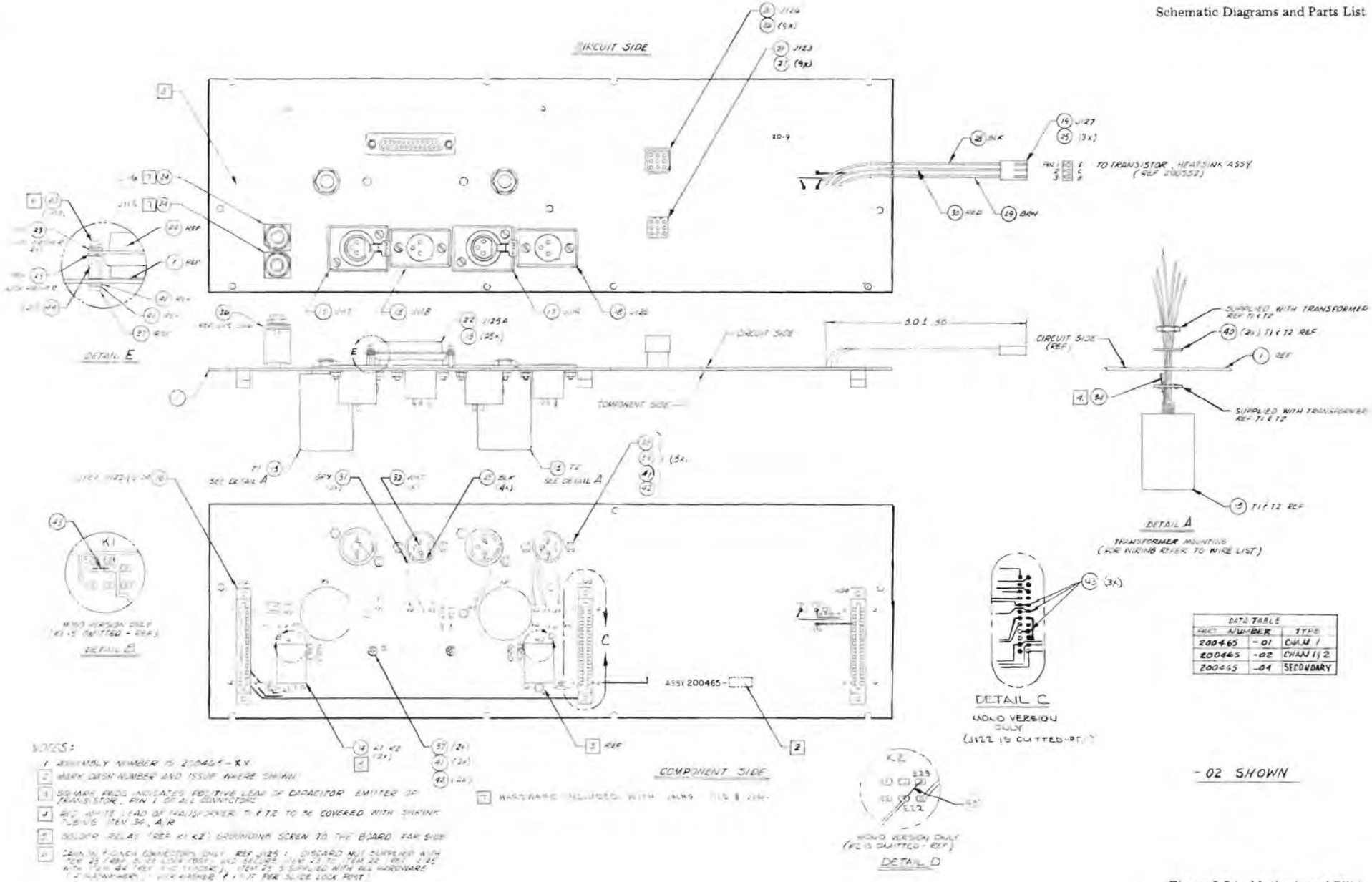

Figure 8-54. Motherboard PWA

Table 8-1. Schematic Diagrams and Parts List

FIG. & REF.	QUANTITY PER ASSEMBLY -02						DESCRIPTION	PART NO.	MFR. PART NO.	CODE IDENT. NO.
8-55	Ref						Regulator, bias osc & ampl PWA (see Fig. 8-50 for NHA)	200470-02		
R33	1						Res, carb, 180Ω ±5%, 1/4W	149078		
R6, R7	2						Res, carb, 27Ω ±5%, 1/4W	149149		
R2, R3	2						Res, carb, 390Ω ±5%, 1/4W	149054		
R18, R19	2						Res, carb, 680Ω ±5%, 1/4W	149051		
R12, R24, R25	3						Res, carb, 1 kΩ ±5%, 1/4W	149011		
R11, R29, R30, R35, R42	6						Res, carb, 2.2 kΩ ±5%, 1/4W	149098		
R26	1						Res, carb, 3.3 kΩ ±5%, 1/4W	149091		
R5, R39	2						Res, carb, 4.7 kΩ ±5%,	149056		
R34	1						Res, carb, 5.6 kΩ ±5%, 1/4W	149092		
R31	1						Res, carb, 10 kΩ ±5%, 1/4W	149070		
R28	1						Res, carb, 330Ω ±5%, 1/4W	149095		
R9, R20, R21, R43	4						Res, carb, 22 kΩ ±5%, 1/4W	149013		
R13	1						Res, carb, 27 kΩ ±5%, 1/4W	149047		
R8	1						Res, carb, 33 kΩ ±5%, 1/4W	149101		
R15, R17	2						Res, carb, 100 kΩ ±5%, 1/4	149073		
R45	1						Res, carb, 68Ω ±5%, 1/4W	149150		
R16, R32	2						Res, metal oxide, 680Ω ±1%, 1/4W	149076		
R1, R23	2						Res, carb, 4.7Ω ±5%, 1/2W	150303		
R4, R41	2						Res, carb, 1Ω ±5%, 1/2W	149136		

Table 8-1. Schematic Diagrams and Parts List

FIG. & REF.	QUANTITY PER ASSEMBLY -02						DESCRIPTION	PART NO.	MFR. PART NO.	CODE IDENT. NO.
8-55							Regulator, bias osc & ampl PWA (continued)	200470-02		
R14	1						Res, carb, 270Ω ±5%, 1/2W	150324		
R22	1						Res, carb, 1.5 kΩ ±5%, 1/2W	150333		
Q6, Q13	2						Xstr	152050	2N4401	03508
Q5, Q7, Q16	3						Xstr	152051	2N4403	03508
Q4, Q9, Q10, Q11	4						Xstr	152018	BC409C (Alternates: A159C,BC109C, BC549C)	25403
Q12	1						Xstr	152020	D40D5	03508
C19	1						Cap, Ta, rdl ld, 10 μF ±20%, 35V	171013	TAG-20-10/35-20	80795
Q3	1						Xstr, FET	152055	2N5457	27014
Q14	1						Xstr, pwr	152024	MJE3055	04713
Q2, Q15	2						Xstr, silicon	152046	2N2905-A	04713
Q1	1						Xstr, silicon, NPN	152047	D40D7	03508
Q8	1						Xstr, silicon, PNP	152048	D41D7	03508
36	1						Heatsink	200530-01		
CR2, CR3, CR5, CR6	4						Diode	153000	1N4148	03508
CR1, CR4	2						Diode	153001	SD05	12060
VR2	1						Diode, 12V zener	153020	1N4742A	04713
R10	1						Res, var, 200 kΩ	156043	3349W-204	80294
43	3						Nut, machine, hex, 4-40 unc	111052		
44	2						Lockwasher, int t, #4	111022		
C17, C20, C22	4						Cap, elctlt, 4.7 μF, 63V	164002	ET4P7X063A3	80031

FIG. & REF.	QUANTITY PER ASSEMBLY -02						DESCRIPTION	PART NO.	MFR. PART NO.	CODE IDENT. NO.
8-55							Regulator, bias osc & ampl PWA (continued)	200470-02		
C2, C3, C10	3						Cap, elctlt, 50 μF, 50V	164011	TE-1307	56289
C18	1						Cap, cer disc, 0.005 μF ±20%, 500V	163010	Type SM	91418
C1	1						Cap, cer disc, 10 pF ±10%, 1 kV	163035	Type CM	91418
C13	1						Cap, polyest flat film, 0.47 μF ±10%, 250V	167021	C280AE/A470K	80031
C4, C6, C7, C9, C16, C21	6						Cap, polyest flat film, 0.1 μF ±20%, 250V	167019	C280AE/P100K	80031
C8	1						Cap, Ta, rdl ld, 2.2 μF ±20%, 35V	171006	TAG-20-2.2/35-20	71468
C5	1						Cap, cer disc, 0.001 μF ±20%, 500V	163058	Type BA	91418
C12, C14, C15	3						Cap, ps, 0.002 μF ±2.5%, 63V	170009	RPF	71590
TP3	1						Test point, red	162174		
TP2	1						Test point, blk	162175		
TP1, TP4	2						Test point, yel	162176		
L1	1						Inductor, 10 μH ±10%	149085	9320-30	43543
60	2						Washer, fiber, insulating	111138	2317-F120	06540
R27	1						Res, carb, 8.2 kΩ ±5%, 1/4W	149074		
R40	1						Res, metal oxide, 21 kΩ ±1%, 1/4W	149089	RN60D	71984
R37, R38, R44	3						Res, metal oxide, 20 kΩ ±1%, 1/4W	149088	RN60D	71984
64	A/R						Heatsink compound	162180	340	71984

Table 8-1. Schematic Diagrams and Parts List

FIG. & REF.	QUANTITY PER ASSEMBLY -02						DESCRIPTION	PART NO.	MFR. PART NO.	CODE IDENT. NO.
8-55							Regulator, bias osc & ampl PWA (continued)	200470-02		
65 Ref Q2, Q15	2						Transipad, xstr spacer	152083		
66 Ref Q1, Q8	2						Screw, pnh, 4-40 x 3/8	110172		
67 Ref Q1, Q8	2						Washer, flat, #4	111002		
68	1						Support, xstr mtg	202643-01		
76	3						Term, sq wire, crimp style	160001	2478	27264
77	1						Conn, 3-pin	160020	2139-3-2	27264

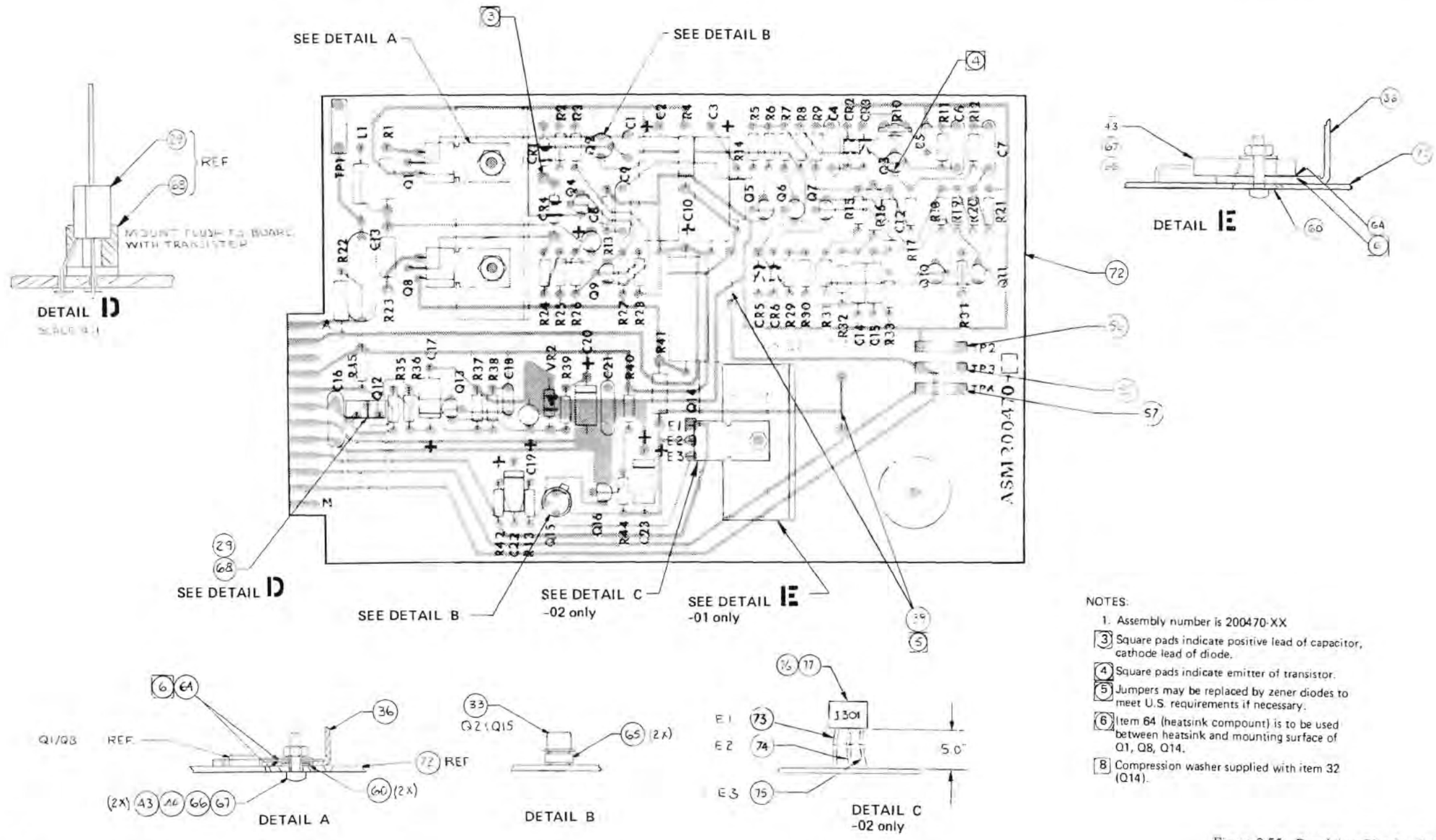

NOTES:

1. Assembly number is 200470-XX

3 Square pads indicate positive lead of capacitor, cathode lead of diode.

4 Square pads indicate emitter of transistor.

5 Jumpers may be replaced by zener diodes to meet U.S. requirements if necessary.

6 Item 64 (heatsink compount) is to be used between heatsink and mounting surface of Q1, Q8, Q14.

8 Compression washer supplied with item 32 (Q14).

200470 M

Figure 8-55. Regulator, Bias Oscillator and Amplifier PWA

Table 8-1. Schematic Diagrams and Parts List

FIG. & REF.	QUANTITY PER ASSEMBLY -01	-02					DESCRIPTION	PART NO.	MFR. PART NO.	CODE IDENT. NO.
8-56	Ref	-					Rec/PB control panel assy, mono 1/2 trk, stereo and quad (see Figs. 8-50 and 8-51 for NHA)	200548-01		
	-	Ref					Rec/PB control panel assy, mono FT (see Fig. 8-50 for NHA)	200548-02		
1	1	1					Cont panel	200427-01		
2	1	1					Vu meter light board assy	200544-01		
	1	1					. Vu meter light PWB	200592-01		
	2	2					. Lamp, TI, 28V, 0.04A, wire base	162033	2187	71744
3	1	1					Cover plate, cont panel	200434-01		
4	1	-					Rec/PB ampl PWB subassy (see Fig. 8-58 for bkdwn)	200699-01		
R-102/ R103, S102	1	1					Pot, dual concentric, 20 kΩ - 20 kΩ, ±10%	200545	11M205	01121
6	-	1					Rec/PB ampl PWB subassy (see Fig. 8-58 for bkdwn)	200699-02		
7	1	1					Cont panel harness assy (see Fig. 8-59 for bkdwn)	200588-03		
R101	1	1					Res, var, 500Ω	156051	70A1N048 P501D	01121
9	2	2					Screw, flh, 2-56 unc x 1/4	110000		
10	2	2					Screw, pnh, 6-32 x 3/16	110176		
11	3	3					Screw, pnh, 4-40 unc x 3/16	110192		
12	3	3					Lockwasher, int t, #4	111022		
13	2	2					Lockwasher, int t, #6	111033		
14	2	2					Lug, solder, int t, bend, #10	162106	1414-10	83330
DS1	1	1					LED lamp w/ chip	162177	5082-4408	28480
16	1	1					Vu meter	162160	2135	74542
17 S104	1	1					Switch w/ lamp, screw base	200587	27312L, P1218	82389
18 S103	1	1					Switch, spdt, toggle, 125V, 6A flatted handle	162170	SS1-1FL	0000B
19	1	1					Knob, 1.26 x 0.75	162171	PC1F28	23480
20	1	1					Knob, cont panel	200574		
21	1	1					Brkt, switch and squelch, bd mtg	201508-01		

FIG. & REF.	QUANTITY PER ASSEMBLY -01	-02					DESCRIPTION	PART NO.	MFR. PART NO.	CODE IDENT. NO.
8-56							Rec/PB cont panel assy (continued)	200548-		
22	A/R	A/R					Tape, psa, double sided, 1/2 in w	162252		
26	1	1					Squelch PWA (see Fig. 7-61 for bkdwn)	201510-01		
27	2	2					Screw, pnh, 6-32 x 5/16	110181		
28	2	2					Washer, flat, #6	111003		
R104	1	1					Res, carb, 5.6Ω ±5%, 1/4W	149148		
C101, C102	2	2					Cap, cer disc, 0.02 uF ±20%, 25V	163016	Type M-25	91418
E1	1	1					Standoff, insulated, brn, 2-56	160206	4872-1-05-11	12284
Ref S103	1	1					Panel dress knob	112382	7099	09353

NOTES:

2 Apply item 22 (psa tape), 1/2 inch strips, between item 1 (control panel) and item 3 (cover plate) as shown.

4 LED (DS1) short lead (No. 1), long lead (No. 2) ref only.

5 C101, C102 & R104 to be soldered from S104 (item 17) to E1 as listed in Table A.

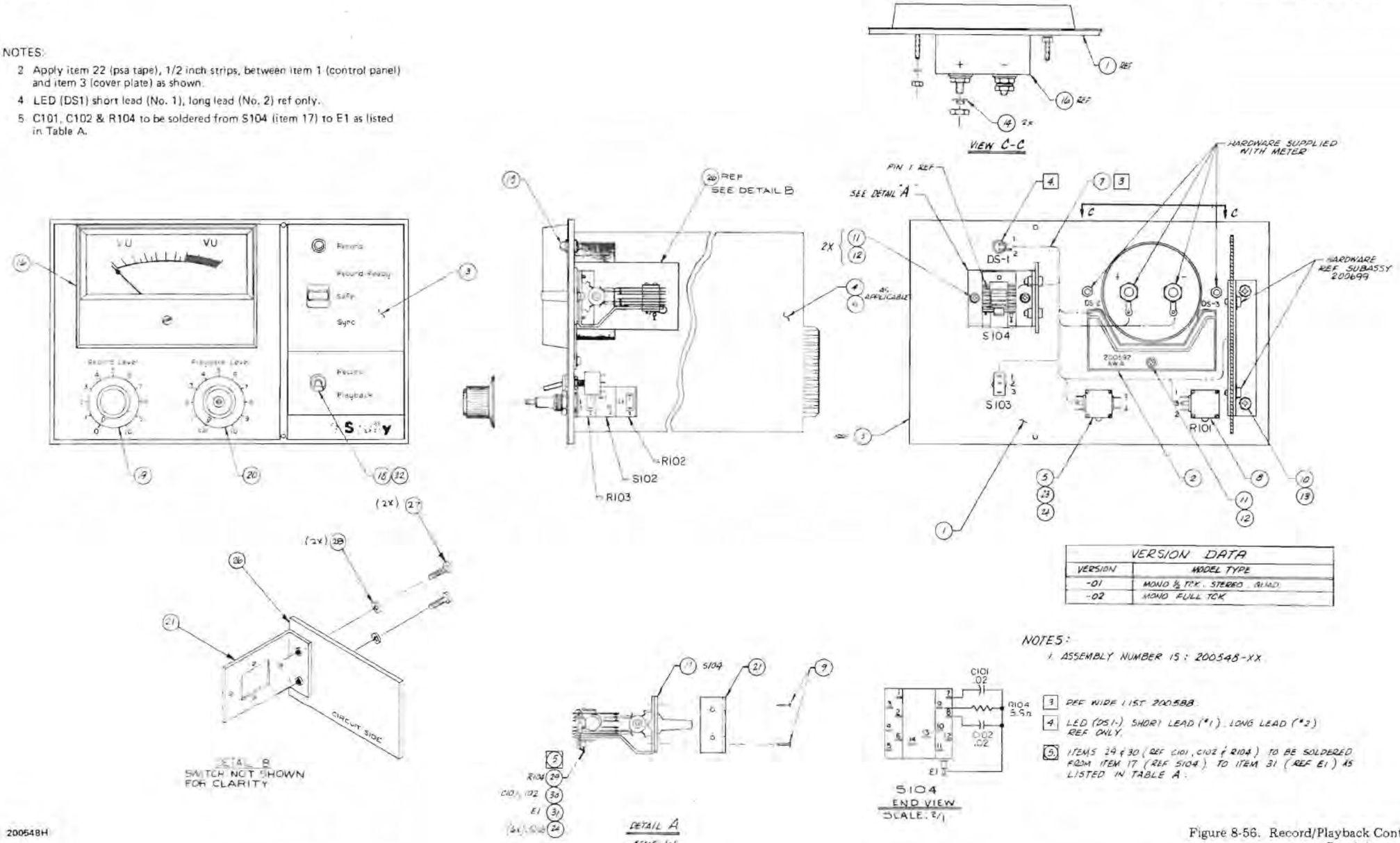

VERSION DATA	
VERSION	MODEL TYPE
-01	MONO ½ TRK. STEREO QUAD
-02	MONO FULL TRK

NOTES:

1. ASSEMBLY NUMBER IS: 200548-XX

3 REF WIRE LIST 200588

4 LED (DS1-) SHORT LEAD (#1), LONG LEAD (#2) REF ONLY.

5 ITEMS 29 & 30 (REF C101, C102 & R104) TO BE SOLDERED FROM ITEM 17 (REF S104) TO ITEM 31 (REF E1) AS LISTED IN TABLE A.

200548H

Figure 8-56. Record/Playback Control Panel Assembly

Table 8-1. Schematic Diagrams and Parts List

FIG. & REF.	QUANTITY PER ASSEMBLY						DESCRIPTION	PART NO.	MFR. PART NO.	CODE IDENT. NO.
	-01	-02	-03	-04	-05	-06				
8-57	Ref	-	-	-	-	-	Rec/PB equalization PWA, NAB 3.75 - 7.5 in/s (see Figs. 8-50, 8-51 and 8-65 for NHA)	200605-01		
	-	Ref	-	-	-	-	Rec/PB equalization PWA, NAB 7.5 - 15.0 in/s (see Figs. 8-50, 8-51 and 8-65 for NHA)	200605-02		
	-	-	Ref	-	-	-	Rec/PB equalization PWA, IEC (CCIR) 7.5 - 15.0 in/s (see Figs. 8-50, 8-51 and 8-65 for NHA)	200605-03		
	-	-	-	Ref	-	-	Rec/PB equalization PWA, NAB 15 in/s, AES 30 in/s (see Figs. 8-50, 8-51 and 8-65 for NHA)	200605-04		
	-	-	-	-	Ref	-	Rec/PB equalization PWA, IEC 15 in/s, AES 30 in/s (see Figs. 8-50, 8-51 and 8-65 for NHA)	200605-05		
	-	-	-	-	-	Ref	Rec/PB equalization PWA, DIN/IEC 3.75 - 7.5 in/s (see Figs. 8-50, 8-51 and 8-65 for NHA)	200605-06		
R5	1	1	1	-	-	1	Res, var, 5 kΩ	156035	3359W-502	80294
R6	-	-	-	-	-	1	Res, var, 5 kΩ	156035	3359W-502	80294
R1, R3, R5, R6	-	3	-	4	4	-	Res, var, 20 kΩ	156036	3359W-203	80294
R1, R3, R6	3	3	3	-	-	-	Res, var, 20 kΩ	156036	3359W-203	80294
R1, R3	-	-	-	-	-	2	Res, var, 20 kΩ	156036	3359W-203	80294
R2, R4	2	2	2	2	2	2	Res, var, 1 MΩ	156041	3359W-105	80294
R9, R10, R12, R13, R14	-	-	-	-	-	5	Res, carb, 4.7 kΩ ±5%, 1/4W	149056		

Table 8-1. Schematic Diagrams and Parts List

FIG. & REF.	QUANTITY PER ASSEMBLY						DESCRIPTION	PART NO.	MFR. PART NO.	CODE IDENT. NO.
	-01	-02	-03	-04	-05	-06				
8-57							Rec/PB equalization PWA (Continued)	200605-		
R9, R10, R12, R13	4	4	-	4	4	-	Res, carb, 4.7 kΩ ±5%, 1/4W	149056		
R9, R13	-	-	5	-	-	-	Res, carb, 4.7 kΩ ±5%	149056		
R7,R8	-	-	2	-	2	-	Res, carb, 330 kΩ ±5%, 1/4W	149067		
R7,R8	2	2	-	2	-	-	Res, carb, 220 kΩ ±5%, 1/4W	149072		
R14	-	1	1	-	-	-	Res, carb, 220 kΩ ±5%,1/4W	149118		
R11, R14	-	-	-	2	2	-	Res, carb, 220 kΩ ±5%, 1/4W	149118		
R7	-	-	-	-	-	1	Res, carb, 330 kΩ ±5%, 1/4W	149067		
C3	-	1	1	-	-	-	Cap,ps,0.0051 uF ±5% 63V	170026	2222-424-2-5102	80031
C3,C5	2	-	-	-	-	2	Cap,ps,0.0051 uF ±5%, 63V	170026	2222-424-2-5102	80031
R8	-	-	-	-	-	1	Res, carb, 220 kΩ ±5%, 1/4W	149072		
C1, C2	1 pr	1 pr	1 pr	1 pr	1 pr	1 pr	Cap,matched pair,0.0068 uF	200785-01		
C7	-	1	1	-	-	-	Cap,polyest film, 0.015 uF ±10%, 80V	167030	192P1539R8	56289
C7, C8	-	-	-	2	2	-	Cap, polyest film, 0.015 uF ± 10%, 80V	167030	192P1539R8	56289
C4	-	-	1	-	-	-	Cap, polyest film, 0.0068 uF ±10%, 80V	167046	192P6829R8	56289
C6	-	-	-	-	-	1	Cap, polyest film, 0.0068 uF ±10%, 80V	167046	192P6829R8	56289
C9	-	-	-	1	1	-	Cap, monolytic cer, 0.33 uF, 25V	163042	5C023224D-9250B3	56289
C10	1	-	-	-	-	1	Cap, cer disc, 0.1 uF ±20%,	163017	Type M-25	91418
L1	1	-	-	-	-	1	Inductor, choke, 10,000 uH	149064	WEE-10000	43543

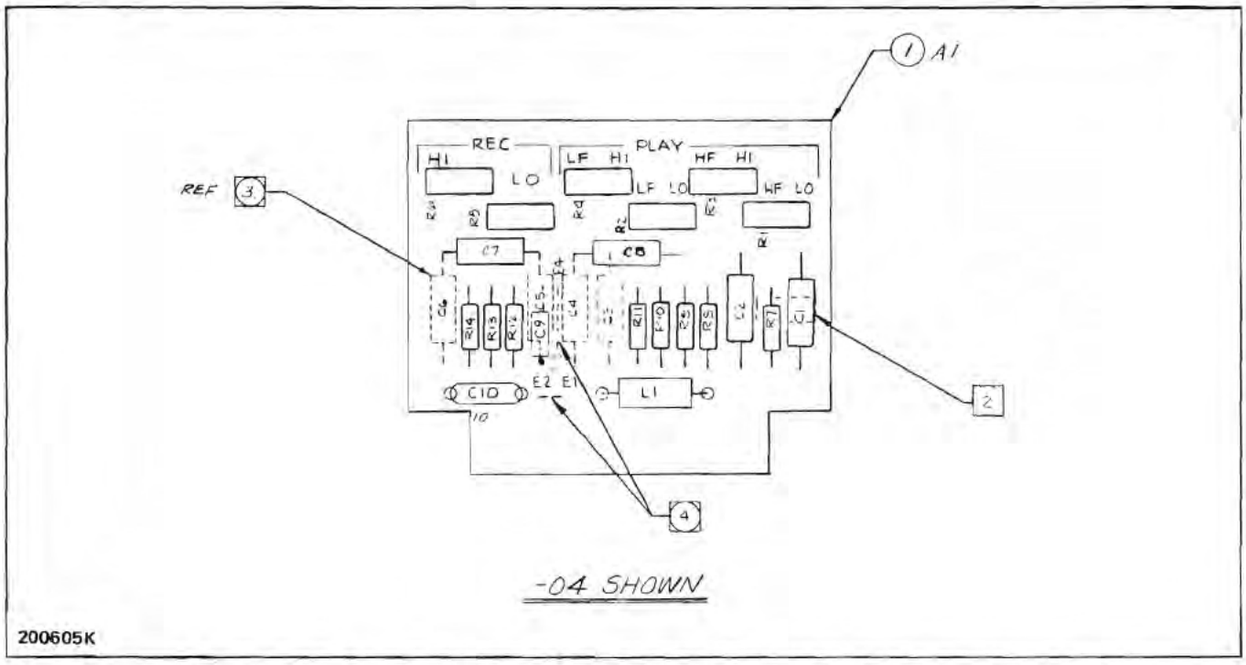

Figure 8-57. Record/playback Equalization PWA

FIG. & REF.	QUANTITY PER ASSEMBLY -01	-02					DESCRIPTION	PART NO.	MFR. PART NO.	CODE IDENT. NO.
8-58	Ref	-					Rec/PB ampl PWB subassy, mono, 1/2 trk, stereo, quad (see Fig. 8-56 for NHA)	200699-01		
	-	Ref					Rec/PB ampl PWB subassy, mono, FT (see Fig. 8-56 for NHA)	200699-02		
1	1	-					Rec/PB ampl PWA (see Fig. 8-61 for bkdwn)	200455-01		
2	1	1					Top shield	200460-01		
3	1	1					Bottom shield	200506-01		
4 T2	1	1					Xfmr, line	157006	S81-X	81095
5	1	1					Bracket, PWA, mtg	200430-01		
6	2	2					Spacer, brass, #6 x 0.25	112021		
7	2	2					Spacer, brass, #6 x 0.50	112023		
8	4	4					Screw, pnh, 6-32 unc x 0.38	110170		
9	2	2					Screw, pnh, 6-32 x 1.25	110228		
10	4	4					Nut, hex, kep, ext lock-washer, 6-32 x 1/4	111115		
11	2	2					Lockwasher, ext t, #6	111033		
12	2	2					Washer, shoulder, extruded fiber, #6	111050		
13	1	1					Plate, screw	200737-01		
14	1	1					Fuse clip	162234	5681-15	71400
15	1	1					Tool, duplex aligner, short	162235	C8277	72653
16	2	2					Washer, flat, #6, small pattern, 1/4 od	111134		
17	-	1					Rec/PB ampl PWA (see Fig. 8-61 for bkdwn)	200455-02		

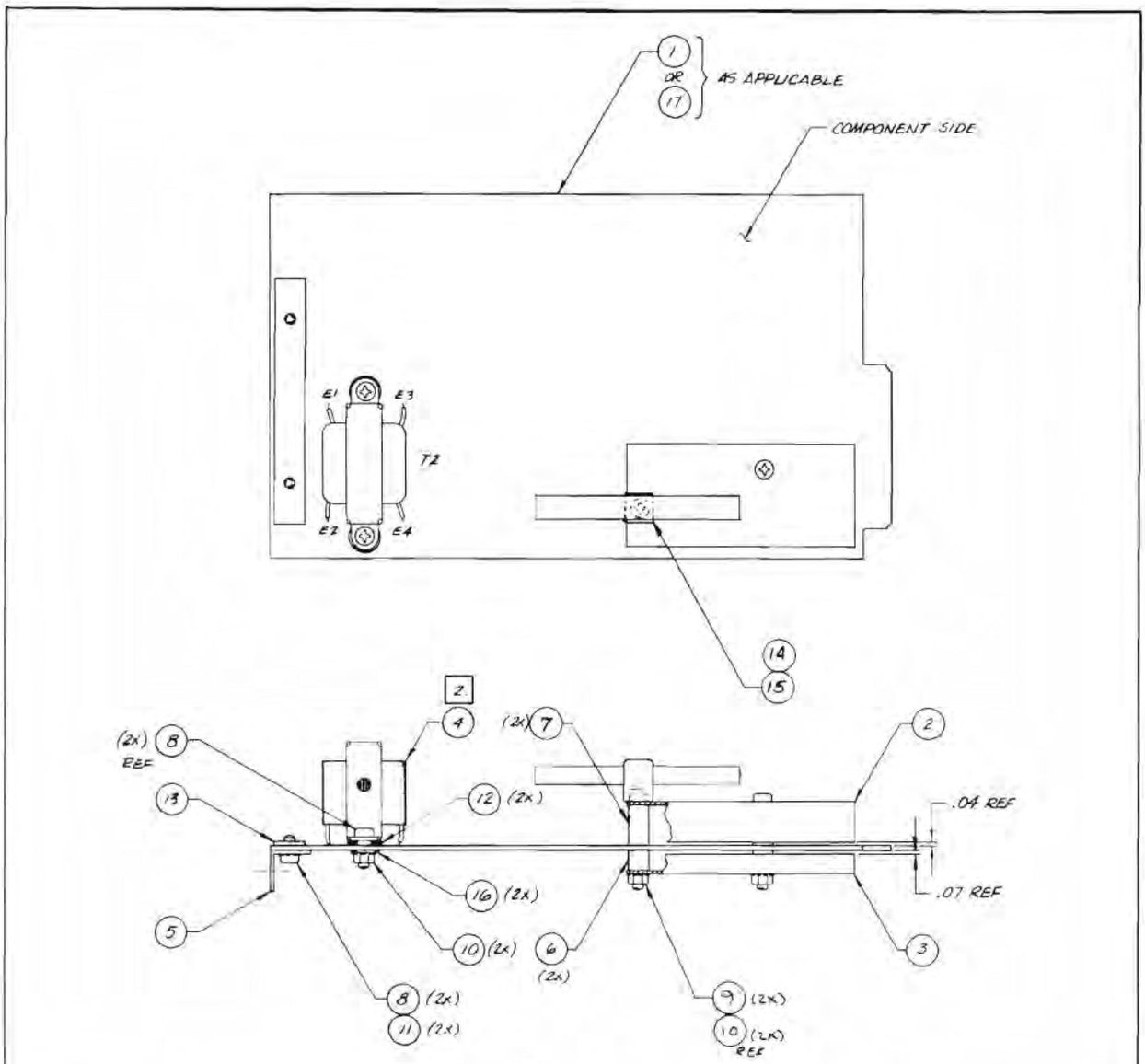

NOTES:

1. ASSEMBLY NUMBER IS : 200699-XX.
2. FOR WIRING OF T2 REFER TO WIRING DATA TABLE.

2 WIRING DATA				
WIRE NO	FROM	TO	COLOR	LENGTH
1.	T2 (BLU)	E1	—	A/R
2.	T2 (RED)	E2	—	A/R
3.	T2 (GRN)	E3	—	A/R
4.	T2 (BLK)	E4	—	A/R

200699B

Figure 8-58. Record/Playback PWB Subassembly

Table 8-1. Schematic Diagrams and Parts List

FIG. & REF.	QUANTITY PER ASSEMBLY						DESCRIPTION	PART NO.	MFR. PART NO.	CODE IDENT. NO.
	-03									
8-59	Ref						Control panel harness assy (see Fig. 8-56 for NHA)	200588-03		
1 P002	1						Conn, sq wire, 6-hole, 0.156 centers	160022	2139-6-2	27264
2 P001	1						Conn, sq wire, 12-hole, 0.156 centers	160024	2139-12-2	27264
3 Ref P001, P002	22						Term, sq wire, crimp style, 22-26 ga	160000	2378-T	27264
25 P01	1						Conn, sq wire, 8-hole, 0.156 centers	160023	2139-8-2	27264
26	2						Term, sq wire, crimp style, 18-24 ga	160001	2478	27264

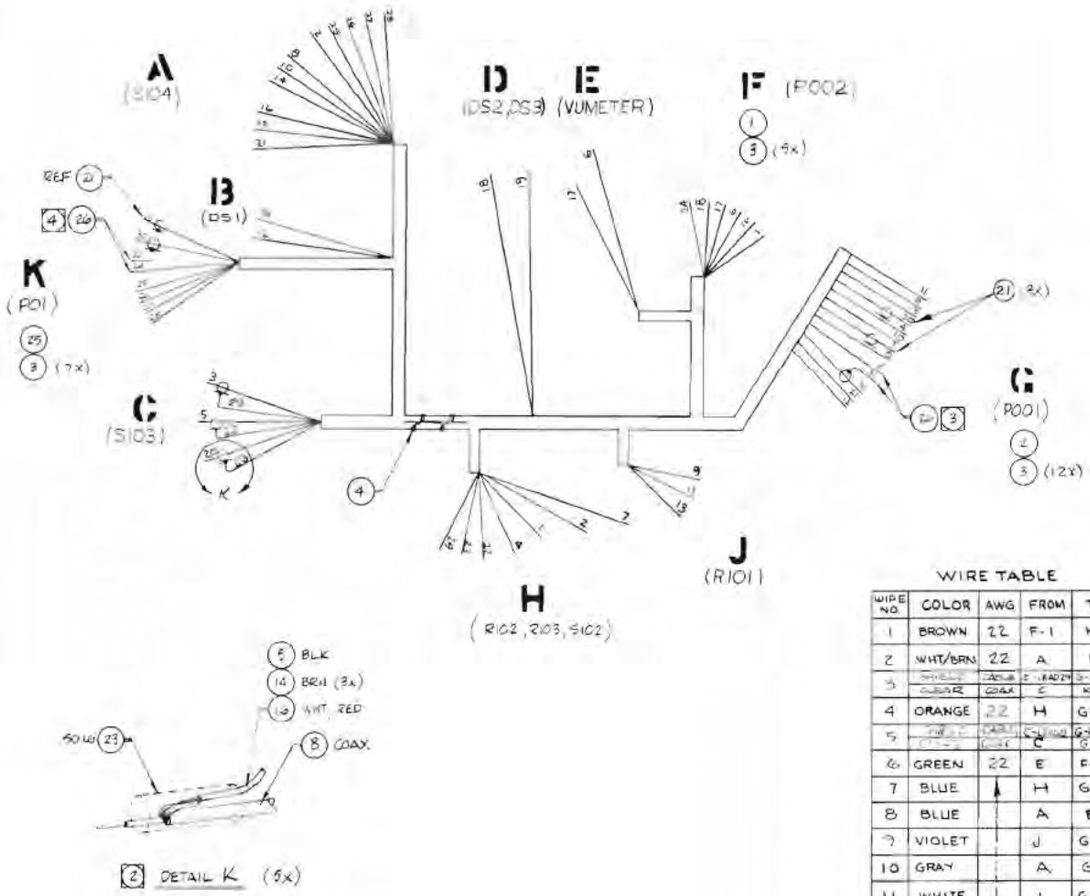

WIRE TABLE

WIRE NO.	COLOR	AWG	FROM	TO
1	BROWN	22	F-1	H
2	WHT/BRN	22	A	H
3	SHIELD	CABLE	E-LEAD24	G-FLOAT
	CLEAR	COAX	C	K-2
4	ORANGE	22	H	G-8
5	SHIELD	CABLE	C-LEAD2	G-FLOAT
	CLEAR	COAX	C	G-5
6	GREEN	22	E	F-4
7	BLUE	↑	H	G-6
8	BLUE		A	B
9	VIOLET		J	G-11
10	GRAY		A	G-7
11	WHITE		J	G-12
12	BLACK		B	G-1
13	WHT/BRN		J	G-10
14	WHT/RED		A	G-4
15				
16	WHT/YEL		A	F-3
17	WHT/GRN		E	F-5
18	WHT/BLU	↑	D	F-6
19	WHT/BLU	22	A	D
20	SHIELD	CABLE	E-LEAD23	G-FLOAT
	CLEAR	COAX	C	G-9
21	WHT/BLK	22	A	G-2
22	BROWN	22	H	C-SHIELD
23	BROWN	22	H	C-SHIELD
24	BLK	22	F-2	K-1
25	ORN	22	A	K-3
26	YEL	22	A	K-4
27	BRN	22	A	K-5
28	WHT/BLU	22	A	K-8
29	BRN	22	H	C-SHIELD
30	SHIELD	CABLE	G-LEAD 31	G-LEAD 16
	CLEAR	COAX	K-7	G-3
31	WHT/RED	22	[illegible]	G-4
32	BLK	22	[illegible]	K-1

NOTES:

1. PART NUMBER IS 200588-03.
2. SCRIB CUT BRAID, SOLDER ITEM 14 (WIRE, BRN) OR ITEM 5 (WIRE, BLK) OR ITEM 16 (WIRE, WHT/RED) AS APPLICABLE, TO SHIELD OF ITEM 8 (COAX) AND COVER WITH ITEM 23 (SHRINK TUBING).
3. WIRE NO 14 & 31 (P001-4) TO BE DOUBLED-UP AND CRIMPED TOGETHER WITH ITEM 26 (REF 160001).
4. WIRE NO 24 & 32 (P01-1) TO BE DOUBLED-UP AND CRIMPED TOGETHER WITH ITEM 26 (REF 160001).

200588F

Figure 8-59. Control Panel Harness

Table 8-1. Schematic Diagrams and Parts List

FIG. & REF.	QUANTITY PER ASSEMBLY -01						DESCRIPTION	PART NO.	MFR. PART NO.	CODE IDENT. NO.
8-60	Ref						Squelch PWA (see Fig. 8-56 for NHA)	200510-01		
R8	1						Res, carb, 47 kΩ ±5%, 1/4W	149012		
R6, R7	2						Res, carb, 1 kΩ ±5%, 1/4W	149011		
R4	1						Res, carb, 3.3 kΩ ±5%, 1/4W	149091		
R9, R10	2						Res, carb, 10 kΩ ±5%, 1/4W	149070		
R11	1						Res, carb, 100 kΩ ±5%, 1/4W	149073		
R3, R12	2						Res, carb, 1 MΩ ±5%, 1/4W	149087		
R1, R2	2						Res, carb, 180 kΩ ±5%, 1/4W	149097		
C3	1						Cap, flat film, 0.068 μF ±20%, 250V	167018	C280AE/P68K	80031
C2	1						Cap, met polyest, rdl ld, 0.22 μF ±10%, 100V	167080	MKT1822-422/0	0000A
C1	1						Cap, flat film, 0.22 μF ±20%, 250V	167020	C280AE/P220K	80031
C4	1						Cap, Ta, rdl ld, 10 μF ±20%, 35V	171013	TAG-20-10/35-20	71468
R5	1						Res, carb, 470Ω ±5%, 1/4W	149010		
Q2-Q4	3						Xstr, NPN, TO 92	152050	2N4401	04713
Q1	1						Xstr, FET, TO 92	152014	2N5461	04713
CR1-CR5	5						Diode	153000	1N4148	03508
J01	1						Wafer assy, 8 ckt, 0.156 centers	160011	A-2403-8A	27264

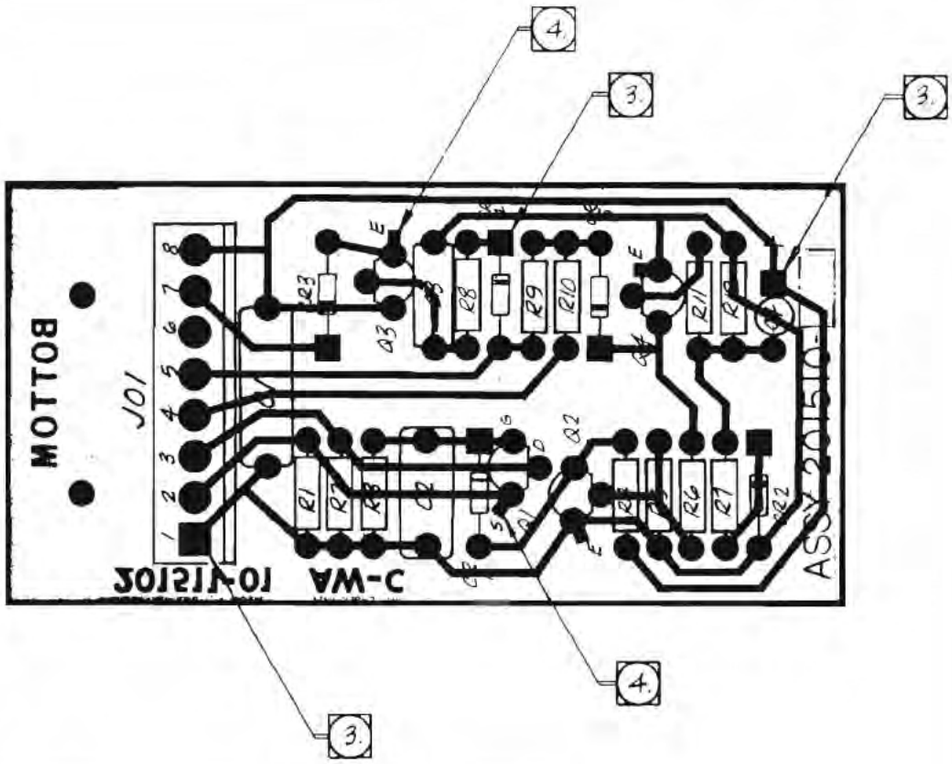

NOTES:

3. Square pad indicates positive lead of capacitor, cathode lead of diodes, pin 1 of connector J01.

4. Pad with tab indicates emitter of transistors, source of FET

Figure 8-60. Squelch PWA

Table 8-1. Schematic Diagrams and Parts List

FIG. & REF.	QUANTITY PER ASSEMBLY -01	-02					DESCRIPTION	PART NO.	MFR. PART NO.	CODE IDENT. NO.
8-61	Ref	-					Rec/PB ampl PWA, mono, 1/2 trk, stereo, quad (see Fig. 8-58 for NHA)	200455-01		
	-	Ref					Rec/PB ampl PWA, mono, FT (see Fig. 8-58 for NHA)	200455-02		
T1	1	1					Xfmr assy, bias input	200559		
8 Ref Q9, R32, R53	2	2					Transipad, 4-hole	162390		
L1, L2	2	2					Inductor, 4.7 mH	149065	2307-475	71895
J103	1	1					Conn, PWB	160128	50-70B-1	71785
R47	1	1					Res, carb, 5.6Ω ±5%, 1/4W	149148		
R16, R35, R36	3	3					Res, carb, 10Ω ±5%, 1/4W	149055		
R24	1	1					Res, carb, 47Ω ±5%, 1/4W	149115		
R9, R19, R21	3	3					Res, carb, 100Ω ±5%, 1/4W	149063		
R18	1	1					Res, carb, 220Ω ±5%, 1/4W	149118		
R25, R38	2	2					Res, carb, 330Ω ±5%, 1/4W	149095		
R33, R34	2	2					Res, carb, 390Ω ±5%, 1/4W	149054		
R11	1	1					Res, carb, 470Ω ±5%, 1/4W	149010		
R3, R8, R23, R39	4	4					Res, carb, 1 kΩ ±5%, 1/4W	149011		
R13 R22, R43, R44	4	4					Res, carb, 2.2 kΩ ±5%, 1/4W	149098		
R30, R45	2	2					Res, carb, 3.3 kΩ ±5%, 1/4W	149091		

FIG. & REF.	QUANTITY PER ASSEMBLY -01	-02					DESCRIPTION	PART NO.	MFR. PART NO.	CODE IDENT. NO.
8-61							Rec/PB ampl PWA (cont'd)	200455-		
R31	1	1					Res, carb, 4.7 kΩ ±5%, 1/4W	149056		
R40	1	1					Res, carb, 8.2 kΩ ±5%, 1/4W	149074		
R15, R17, R41	3	3					Res, carb, 10 kΩ ±5%, 1/4W	149070		
R5	1	1					Res, carb, 22 kΩ ±5%, 1/4W	149013		
R28, R52	2	2					Res, carb, 39 kΩ ±5%, 1/4W	149053		
R2, R10, R20, R27, R29, R48	6	6					Res, carb, 47 kΩ ±5%, 1/4W	149012		
R50	1	1					Res, metal oxide, 68Ω ±1%, 1/4W	149112		
R4	-	1					Res, carb, 820Ω ±5%, 1/2W	150330		
R42	1	1					Res, carb, 220 kΩ ±5%, 1/4W	149072		
R46	1	1					Res, carb, 330 kΩ ±5%, 1/4W	149067		
R49	1	1					Res, metal oxide, 100 kΩ ±5%, 1/2W	149028		
R51	1	1					Res, metal oxide, 100Ω ±1%, 1/4W	150089		
R14	1	1					Res, carb, 10Ω ±5%, 1/2W	150307		
R4	1	-					Res, carb, 1 kΩ ±5%, 1/2W	150331		
Q2, Q3	2	2					Xstr	152050	2N4401	03508
Q5	1	1					Xstr	152051	2N4403	03508
Q1, Q4, Q6-Q8, Q12-Q16	10	10					Xstr, hi-gain, NPN	152095 Alternate: 152012	BC550 Alternate: 2N5089	73445 Alt.: 04713
Q11	1	1					Xstr	152047	D40D7	25403
Q10	1	1					Xstr	152048	D41D7	25403
Q9	1	1					Xstr	152046	2N2905A	03508

FIG. & REF.	QUANTITY PER ASSEMBLY -01	-02					DESCRIPTION	PART NO.	MFR. PART NO.	CODE IDENT. NO.
8-61							Rec/PB ampl PWA (cont'd)	200455-		
TP1	1	1					Test point, red	162174	1177	71002
TP2	1	1					Test point, yel	162176	1177	71002
K1, K2	2	2					Relay, 3.2 kΩ, 24 Vdc, 2 form D, PC mount	156061	R10-E2816-1	77342
R6, R7	2	2					Res, var, 20 kΩ	156036	3359W-203	80294
R1, R26	2	2					Res, var, 5 kΩ	156035	3359W-502	80294
R12	1	1					Res, carb, 3.6 kΩ ±5%, 1/2W	150386		
J001	1	1					Conn, 12-pin, PCB	160012	A-2403-12A	27264
J002	1	1					Conn, 6-pin, PCB	160010	A-2403-6A	27264
C2, C8, C10, C12, C21, C23, C25, C27, C29	9	9					Cap, Ta, rdl ld, 10 μF ±20%, 35V	171013	TAG-20-10/35-20	71468
C1, C13, C24	3	3					Cap, Ta, rdl ld, 150 μF ±10%, 6V	171035	196D147X-9006LA3	56289
C3	1	1					Cap, Ta, rdl ld, 2.2 μF ±20%, 35V	171006	TAG-20-2.2/35-20	71468
C28	1	1					Cap, cer disc, 10 pF ±5%, 100V	163025	Type CM	91418
C18	1	1					Cap, cer disc, 99 pF ±10%, 100V	163028	Type CM	91418
C22	1	1					Cap, cer disc, 560 pF ±10%, 100V	163023	Type JG	91418
C9, C6	2	2					Cap, Ta, rdl ld, 1 μF ±20%, 35V	171003	TAG-20-1.0/35-20	80795
C4, C30	2	2					Cap, cer disc, 0.001 μF ±20%, 500V	163058	Type SM	91418
C26	1	1					Cap, cer disc, 330 pF ±10%, 1 kV	163047	CCD-331	72136
C5, C16	2	2					Cap, elctlt, 150 μF, 25V	164023	ET151X025A6	80031
Ref Q10, Q11	2	2					Support, xstr mtg	202643-01		

REF. DES.	QUANTITY PER ASSEMBLY -01	-02					DESCRIPTION	PART NO.	MFR. PART NO.	CODE IDENT. NO.
B+E1							Record/Playback amplifier PWA (conv'dl)	200455-		
C18, C20	2	2					Cap., elctlt, 47 µF, 25V	164009	ET470X025A4	80031
C7	1	1					Cap., cer disc, 0.01 µF +20%, 500V	163001	Type B	91418
C17	1	1					Cap., mica, trimmer, 90 to 400 pF, 350V	172007	429	02958
C15	1	1					Cap., pa, 0.0047 µF ±5%, 600V	170026	2222-424+3-5102	80031
C19	1	1					Cap., cer disc, 220 µF ±10%, 1 kV	163024	Type 3F	91418
C11	1	1					Cap., pa, 0.0033 µF ±5%, 600V	170024	2222-424+2-3902	80031
CR1-CR4	4	4					Diode	143001		
Q12	1	-					Regulator	600101	CK2101	03953
Q13, Q14	-	2					Regulator	600101	CK2101	03953

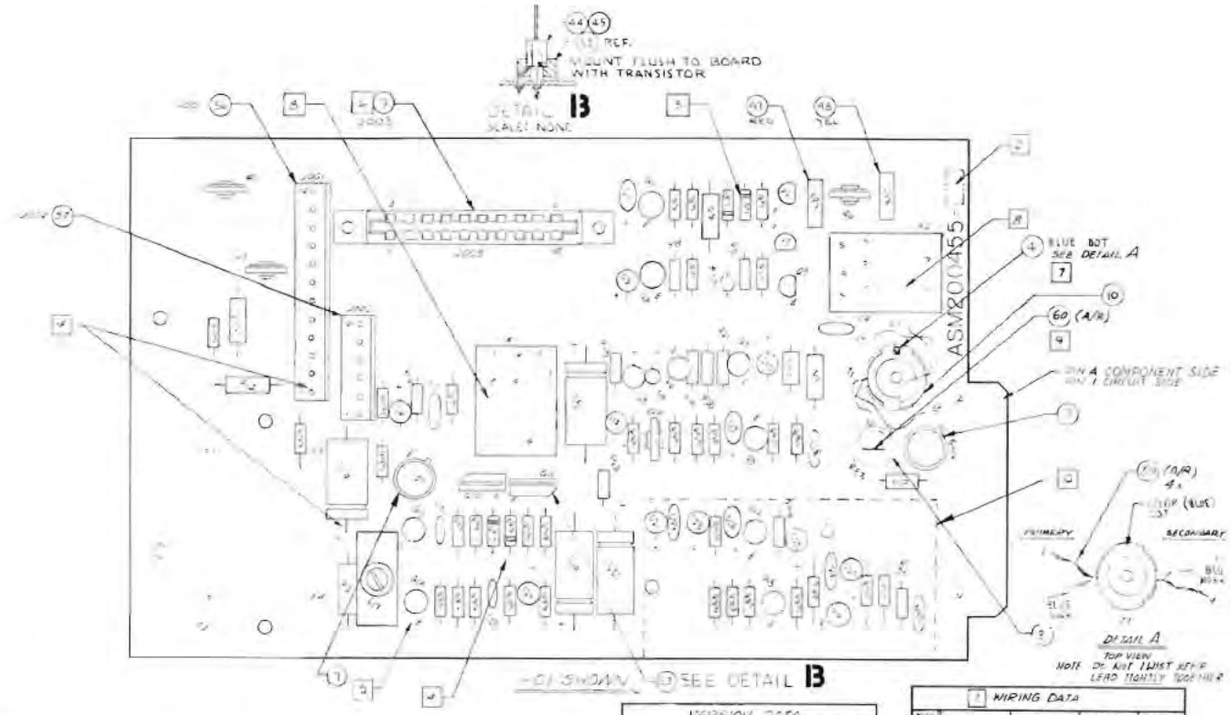

VERSION DATA	
VERSION	MODEL TYPES
-01	[illegible]
-02	[illegible]

7 WIRING DATA					
WIRE NO.	FROM		TO	COLOR	LENGTH
1	[illegible]	[illegible]	[illegible]	BLUE	AR
2	[illegible]	[illegible]	[illegible]	BARE	AR
3	[illegible]	[illegible]	[illegible]	BLUE	AR
4	[illegible]	[illegible]	[illegible]	BARE	AR

NOTES:

3 Solid dark line indicates cathode end of diode.

4 Square pad indicates positive lead of capacitor, cathode lead of diode, and pin 1 on connectors.

5 Pad with tab indicates emitter of transistors.

200455P

Figure 8-61. Record/Playback Amplifier PWA

Table 8-1. Schematic Diagrams and Parts List

FIG. & REF.	QUANTITY PER ASSEMBLY -02						DESCRIPTION	PART NO.	MFR. PART NO.	CODE IDENT. NO.
8-63*	Ref						Conversion kit, stereo to quad (see Fig. 8-14 for NHA)	200962-02		
1	1						Intercon cable assy, quad (see Fig. 8-17 for bkdwn)	200568-03		
2	1						Electronic assy, quad (see Fig. 8-51 for bkdwn)**	201740-01		
3	1						Head bridge assy, quad, 4 trk, 0.50 (see Fig. 8-24 for bkdwn)	200580-05		
4	1						Pinch roller assy (see Fig. 8-21 for bkdwn)	201543-02		
5	1						Pwr and logic transfer cable assy	200843-01		
	2						. Conn, plug, 9 hole	160003	1625-9P	27264
	18						. Term, pin, 0.062 dia, male, 18-22 ga	160028	1560	27264
	2						. Cable tie, nylon	162198	SST-IM-MP	06383
7	1						Conversion kit, console ampl enclosure (see Fig. 8-64 for bkdwn)	200961-03		
8	2						Adj guide assy, 1/4 to 1/2 in	502030400		
	1						. Tape guide	502160401		
	1						. Moving segment	502030403		
	1						. Screw, pnh, 6-32 x 5/8	110073		
	1						. Base	501030302-01		

*This Fig. not illustrated.

**Select two equalization PWA's, Fig. 8-58, as part of this assy.

Table 8-1. Schematic Diagrams and Parts List

FIG. & REF.	QUANTITY PER ASSEMBLY -03						DESCRIPTION	PART NO.	MFR. PART NO.	CODE IDENT. NO.
8-64*	Ref						Conversion kit, console ampl enclosure, mono, stereo to quad (see Fig. 8-63 for NHA)	200962-03		
3	2						Angle, ampl enclosure	200599-01		
9	4						Screw, wood, flh, #8 x 1/2	110154		
15	2						End, ampl enclosure	201275-01		
16	1						Spacer, ampl enclosure	201276-01		
17	4						Thd rod, 10-32 x 12	112326		
29	Ref						Console assy (see Fig. 8-62)	200600		

*This Fig. not illustrated.

Table 8-1. Schematic Diagrams and Parts List

FIG. & REF.	QUANTITY PER ASSEMBLY -01	-02					DESCRIPTION	PART NO.	MFR. PART NO.	CODE IDENT. NO.
8-65*	Ref	-					Conversion kit, mono 1/2 trk to stereo (see Fig. 8-14 for NHA)	200959-01		
	-	Ref					Conversion kit, mono FT to stereo (see Fig. 8-14 for NHA)	200959-02		
2	1	-					Rec/PB cont panel assy, mono 1/2 trk, stereo and quad (see Fig. 8-56 for bkdwn)	200548-01		
3	-	1					Rec/PB cont panel assy, FT (see Fig. 8-56 for bkdwn)	200548-02		
R3, R8	2	2					Res, carb, 470Ω ±10%, 1/4W	150027		
R5, R6	2	2					Res, carb, 1 kΩ ±10%, 1/4W	150031		
R4, R7	2	2					Res, carb, 2.7 kΩ ±10%, 1/4W	150136		
C1, C4	2	2					Cap, Ta, rdl ld, 10 μF ±20%, 35V	171013	TAG-20-10/35-20	71468
C2, C3	2	2					Cap, cer disc, 0.01 μF +80%, -20%, 25V	163015	Type M-25	91418
K1, K2	2	2					Relay, 3.2 kΩ, 24 Vdc	156061	R10-E-2816-1	77342
T2	1	1					Xfmr, 15,000Ω to 600Ω	157005	A-65-J	81095
J122	1	1					Conn, PWB edge, 12-contact, double readout	160098	50-24B-10	71785
J119	1	1					Conn, 3 pin, female, chassis mt	160077		
J120	1	1					Conn, 3 pin, male, chassis mt	160066		
J116	1	1					Jack, earphone	162192	XJ1553	
Ref J115 J116	1	1					Plate, headphone jack	200858-01		
16	-	1					Head bridge assy (see Fig. 8-24 for bkdwn)	200580-02		
							*This Fig. not illustrated.			
							NOTE: Items w/ ref. designator numbers located on motherboard.			

FIG. & REF.	QUANTITY PER ASSEMBLY -01	-02					DESCRIPTION	PART NO.	MFR. PART NO.	CODE IDENT. NO.
8-65*							Conversion kit, mono to stereo (continued)	200959-		
18	4	4					Screw, flh, 82°, 4-40 unc x 3/8	110011		
19	4	4					Nut, hex, mach, 4-40 unc	111052		
20	1	1					Washer, flat, 3/8 id	111007		
21	4	4					Lockwasher, int t, #4	111022		
22	4	4					Washer, flat, #4	111002		
25	Ref	Ref					Motherboard PWA (see Fig. 8-54)	200465-		
26	Ref	Ref					Electronics assy (see Fig. 8-50)	200576		
27	Ref	Ref					Xport assy (see Fig. 8-15)	200575		
28	(1)	(1)					Equalization PWA, NAB 3.75 - 7.5 in/s (see Fig. 8-57 for bkdwn)	200605-01		
29	(1)	(1)					Equalization PWA, NAB 7.5 - 15.0 in/s (see Fig. 8-57 for bkdwn)	200605-02		
30	(1)	(1)					Equalization PWA, IEC 7.5 - 15.0 in/s (see Fig. 8-57 for bkdwn)	200605-03		
31	(1)	(1)					Equalization PWA, NAB 15.0 in/s, AES 30.0 in/s (see Fig. 8-57 for bkdwn)	200605-04		
32	(1)	(1)					Equalization PWA, IEC 15.0 in/s, AES 30.0 in/s (see Fig. 8-57 for bkdwn)	200605-05		
33	(1)	(1)					Equalization PWA, DIN/IEC 3.75 - 7.5 in/s (see Fig. 8-57 for bkdwn)	200605-06		

*This Fig. not illustrated.

(1): Select one equalization PWA.

NOTE: Items w/ ref. designator numbers located on motherboard.

Table 8-1. Schematic Diagrams and Parts List

FIG. & REF.	QUANTITY PER ASSEMBLY -03	-04					DESCRIPTION	PART NO.	MFR. PART NO.	CODE IDENT. NO.
8-66	Ref	-					Remote control assembly, table model (see Fig. 8-14 for NHA)	200925-03		
	-	Ref					Remote control assembly, panel mount (see Fig. 8-14 for NHA)	200925-04		
1	1	1					Cabinet, remote control	200989-01		
2	1	1					Remote panel, standard	200988-01		
3	1	1					Bezel, record button	502010006		
4	1	1					Plate, switch	200994-01		
5	4	-					Pad, cork, 1 in sq	400332-02		
S101-S105	5	5					Switch, pushbutton	162183	01-748510	04426
Ref S102, S103	2	2					Pushbutton, blue	162185	01-931314	04426
Ref S104	1	1					Pushbutton, white	162187	01-931311	04426
Ref S105	1	1					Pushbutton, green	162186	01-931313	04426
Ref S101	1	1					Pushbutton, red	162184	01-931312	04426
11	1	1					Cable clamp, 5/16 id	112136		
12	2	2					Spacer, 0.25 od, thd, 6-32 x 1.0	112057		
13	4	4					Screw, machine, truss hd, 6-32 x 3/8	110322		
14	1	1					Lockwasher, int t, #6	111023		
15	4	-					Screw, truss hd, tapping, #4 x 3/8	110336		
16	4	-					Screw, wood, filh, #4 x 3/4	110261		
19	15	30					Term, pin, 0.062 dia, male, 22 ga	160030	1854	27264
22	-	15					Term, pin, 0.062 dia, female, 22 ga	160031	1855	27264
P111	1	2					Conn, plug, 15-hole	160040	1625-15P	27264
27	-	1					Conn, plug, 15-hole	160050	1625-15R1	27264
28	1	1					Solder lug, int t, bend #6	162074		

Table 8-1. Schematic Diagrams and Parts List

FIG. & REF.	QUANTITY PER ASSEMBLY -03	-04					DESCRIPTION	PART NO.	MFR. PART NO.	CODE IDENT. NO.
8-66							Remote control assy (continued)	200925-		
Ref S101-S105	5	5					Lamp bulb, indicator	162157	335	71744
33	1	1					Washer, flat, #6	111003		

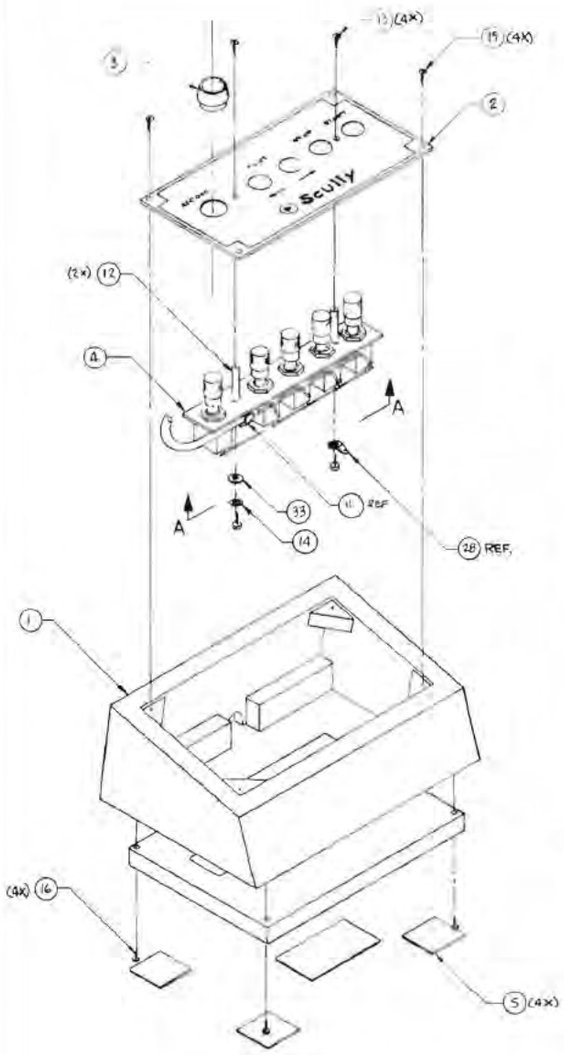

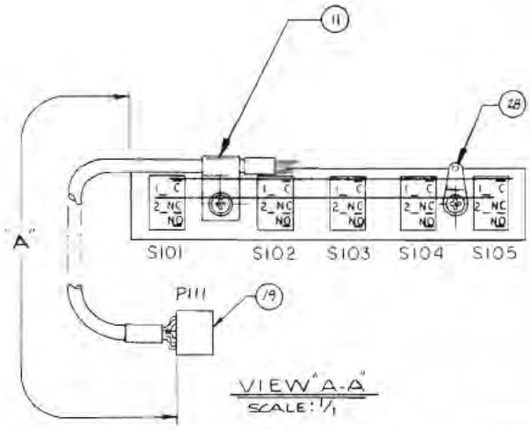

DATA TABLE			
VERSION	DESCRIPTION	LENGTH "A"	MODEL
-03	TABLE MODEL	31.0 FT.	280B/284B
-04	PANEL MOUNT	6.0 IN.	280B, 284B

-03 SHOWN

NOTE: Panel mount version supplied with extra mating connectors and pins (items 19, 26 and 27 on -04 version Model 280B). Custom cable length limited to 50 ft.

200925G

Figure 8-66. Remote Control Assembly

FIG. & REF.	QUANTITY PER ASSEMBLY -01						DESCRIPTION	PART NO.	MFR. PART NO.	CODE IDENT. NO.
8-67*	Ref						Conversion kit, stereo to mono FT (see Fig. 8-14 for NHA)	201285-01		
R4	2						Res, carb, 820Ω ±10%, 1/4W	150166		
R53	2						Raysistor	160101	CK2101	07933
3	1						Head bridge assy (see Fig. 8-24 for bkdwn)	200580-01		
11	Ref						Rec/PB ampl PWA (see Fig. 8-62)	200455		
							*This Fig. not illustrated.			

FIG. & REF.	QUANTITY PER ASSEMBLY -01					DESCRIPTION	PART NO.	MFR. PART NO.	CODE IDENT. NO.
8-68	Ref					Monitor speaker panel assy (see Fig. 8-14 for NHA)	201499-01		
1	1					Panel, monitor speaker	201497-01		
2	1					Cover plate, monitor speaker panel	201498-01		
3	1					Brkt, LAA mtg	250B1251		
4	1					LAA 500 line amp PWA, "A" version (see Fig. 8-69 for bkdwn)	202039-01		
5 R	1					Res, var, 5 kΩ, w/ hardware	156076	JA4N100 P502RA	01121
6	1					Knob, cont, 1-1/4 x 3/4	162171	PCIF28	23480
J1	1					Conn, PC, 6 posn	160134	50-6A-20	71785
P2	1					Conn, plug, 3 hole	160035	1625-3P	27264
9	1					Cable assy, monitor speaker	201515-01		
J2	1					. Conn, rcpt, 3 hole	160045	1625-3R1	27264
	3					. Term, pin, 0.062 dia, male, 22 ga	160030	1854	27264
11	3					Term, pin, 0.062 dia, female, 22 ga	160031	1855	27264
12	4					Screw, flh, 4-40 x 1/4	110173		
13	1					Screw, flh, 4-40 x 3/16	110192		
14	4					Lockwasher, int t, #4	111022		
15	4					Washer, flat, #4	111002		
16	4					Washer, flat, nylon, #6 x 0.370 od x 0.015	111163		
17	1					Speaker, 400, 4Ω	162041	26A2124	07109
18	2					Nut, kep, ext lockwasher, 4-40	111062		
19	2					Screw, flh, 4-40 x 1/2	110191		

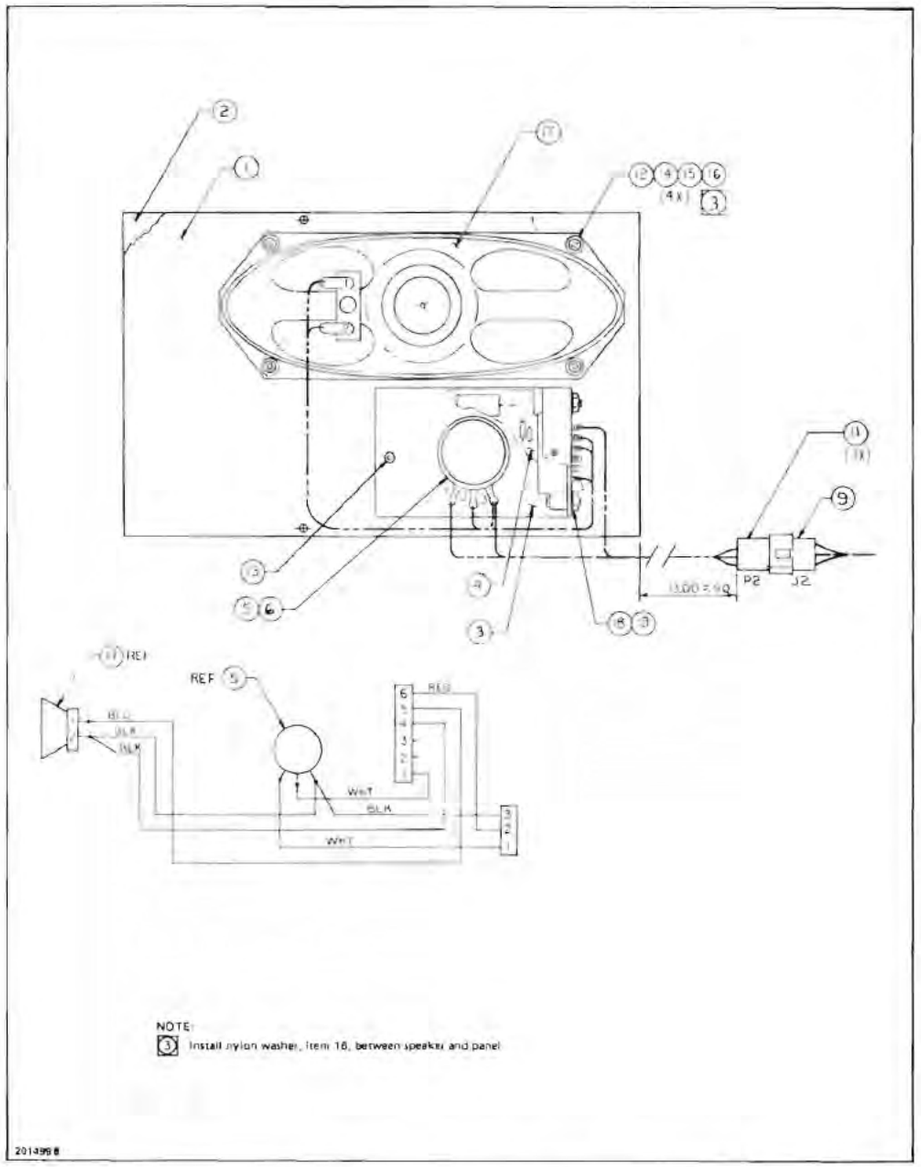

Figure 8-68. Monitor Speaker Panel Assembly

FIG. & REF.	QUANTITY PER ASSEMBLY -01						DESCRIPTION	PART NO.	MFR. PART NO.	CODE IDENT. NO.
8-69	Ref						LAA 500 line amp PWA, "A" version (see Fig. 8-68 for NHA)	202039-01		
2	1						Cap, elctlt, 6.8 µF, 40V	164003	ET6P8X040A2	80031
3	1						Cap, elctlt, 250 µF, 16V	164052	WH11D	56289
4	1						Cap, cer disc, 220 pF ±20%, 1 kV	163000	5GA-T22	56289
5	1						Cap, cer disc, 0.005 µF ±20%, 500V	163010	Type SM	91418
6	1						Cap, met poly, flat film, 22 µF ±20%, 250V	167020	C280AE/P220K	80031
7	1						Cap, cer disc, 0.02 µF ±20%, 25V	163016	Type M-25	91418
8	1						Res, var, 200 kΩ	156043	3359W204	80294
9	2						Res, carb, 1Ω ±5%, 1/2W	149136		
10	1						Res, carb, 100Ω ±5%, 1/4W	149063		
11	2						Res, carb, 1.8 kΩ ±5%, 1/4W	149071		
12	1						Res, carb, 4.7 kΩ ±5%, 1/4W	149056		
13	1						Res, carb, 33 kΩ ±5%, 1/4W	149101		
14	1						Res, carb, 470 kΩ ±5%, 1/4W	149161		
15	1						Xstr, audio pair, NPN/PNP to 1	152010	2N4107	73445
16	1						Xstr	152008	2N3904	04713
17	1						Xstr	152009	2N3906	04713
18	1						Heatsink, dual	162365	H5C-2	73445

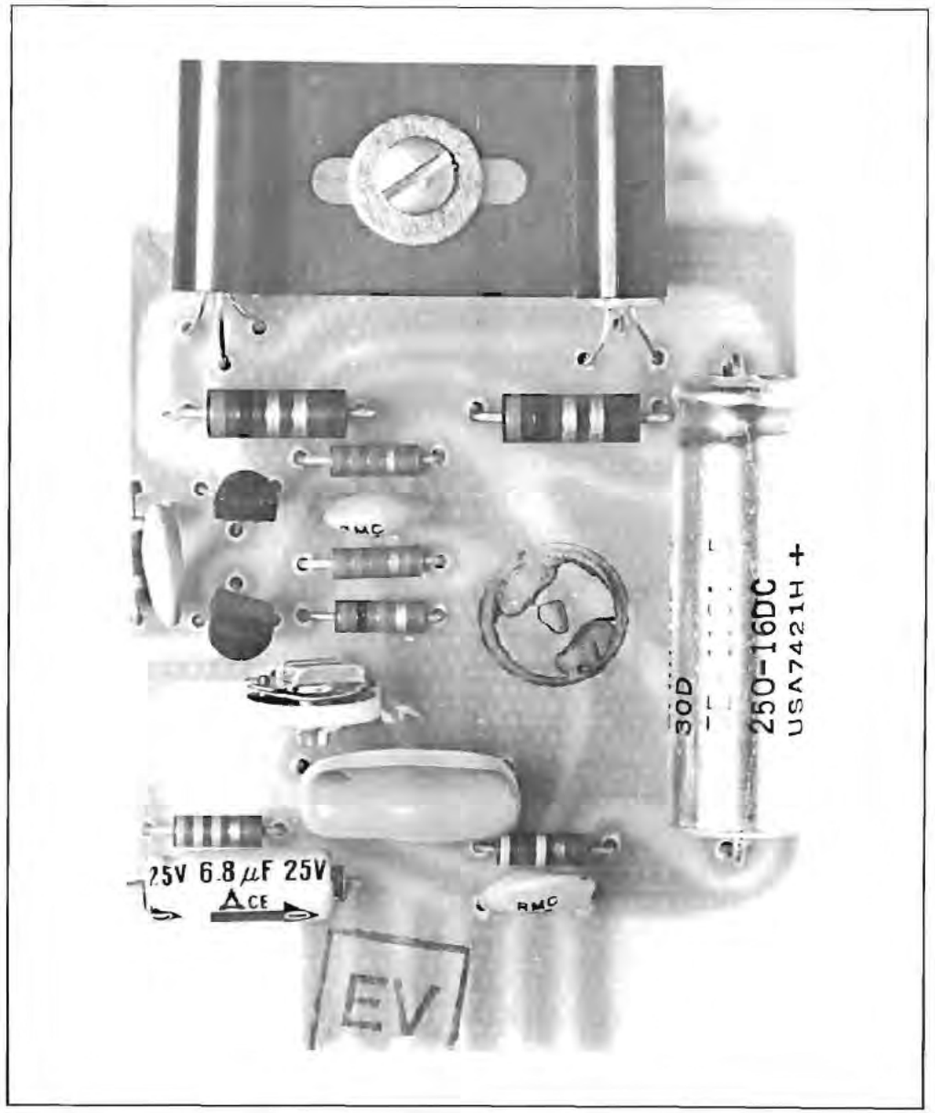

Figure 8-69. LAA 500 Line Amp PWA

Table 8-1. Schematic Diagrams and Parts List

FIG. & REF.	QUANTITY PER ASSEMBLY -01						DESCRIPTION	PART NO.	MFR. PART NO.	CODE IDENT. NO.
8-70	Ref						Tension sensor PWA (see Fig. 8-15 for NHA)	202499-01		
5 Q1	1						Photon coupler	162435	H13B2	03508
6 P203	1						Conn, plug, 60-hole	160037	1625-6 P1	27264
7	4						Term, pin, 0.062 dia, male	160038	1560	27264

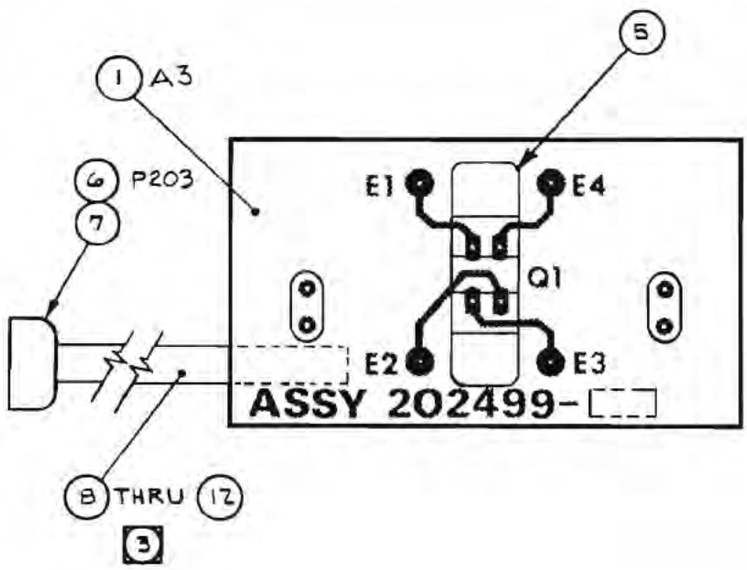

NOTES:

1. Assembly number is 202499-01.

3 All wires to be inserted and soldered on circuit side of board.

202499A

Figure 8-70. Tension Sensor PWA

Table 8-1. Schematic Diagrams and Parts List

FIG. & REF.	QUANTITY PER ASSEMBLY -01						DESCRIPTION	PART NO.	MFR. PART NO.	CODE IDENT. NO.
8-71	Ref						Light sensor assy (see Fig. 8-15 for NHA)	202505-01		
1	1						Holder, light sensor	202487-01		
2	1						Clamp, holder	202486-01		
3	1						Sensor, light	202488-01		
4	2						Setscrew, ovp, 4-40 x 3/32	110177		

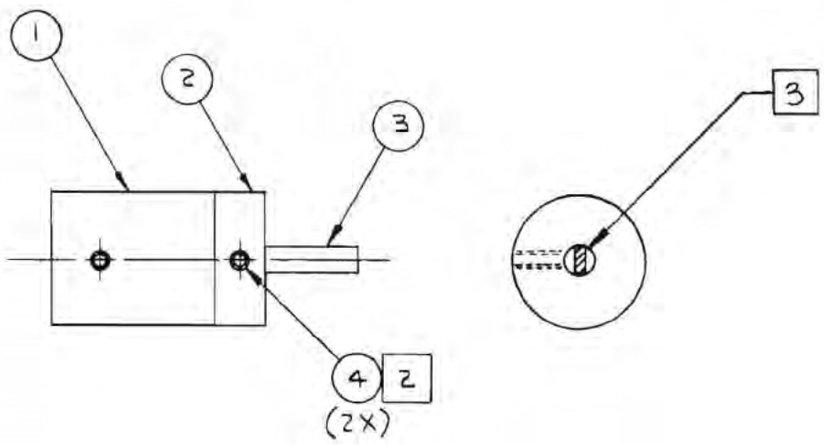

NOTES:

1. Identify assy no. 202505-01 by bag and tag.
2. Orient item 1 to item 2 as shown.
3. Louvers in item 3 to be oriented in the direction shown.

202505A

Figure 8-71. Light Sensor Assembly

Table 8-2. Abbreviations (1 of 2)

a	amperes
ac	alternating current
adj	adjustable
agc	automatic gain control
ampl	amplifier
assy	assembly
A/R	as required
ATL	automatic tape lifter
bd	board
bdgh	binding head
bkdwn	breakdown
blk	black
blu	blue
brkt	bracket
btnhd	button head
cap	capacitor
carb	carbon
ccw	counterclockwise
cd	cadmium
cer	ceramic
cmpsn	composition
cndct	conductor
coax	coaxial
conn	connector
cont	control
cw	clockwise
dc	direct current
dgtl	digital
dia	diameter
dpdt	double-pole, double-throw
dr	drive
drvr	driver
elctlt	electrolytic
elek	electronic
ext	external
F	farad
FET	field effect transistor
filh	fillister head
flh	flat head
FT	full track
fxd	fixed
ga	gage
gen	generator
genl	general
gry	gray
H	henry
hd	head
hex	hexagon
IC	integrated circuit
id	inside diameter
in	inch
instl	installation
int	internal
intercon	interconnecting
kV	kilovolt
ld	lead
lh	left hand
m	milli
mag	magnetic
met	metal
mintr	miniature
mon	monitor
mt	mount
mtg	mounting

Table 8-2. Abbreviations (2 of 2)

mv	multivibrator
my	mylar
NHA	next higher assembly
od	outside diameter
orn	orange
osc	oscillator
ovh.	oval head
ovp.	oval point
p	pico
PB	playback
pf	picofarad
pnh	panhead
polyest	polyester
posn	position
pot	potentiometer
pr	pair
prp	purpose
ps	polystyrene
psa	pressure-sensitive adhesive
pt	point
PWA	printed wiring assembly
PWB	printed wiring board
pwr	power
qdisc	quick disconnect
rcpt	receptacle
rdl	radial
rec	record
ref	reference
reg	regulator
res	resistor
rh	right hand
rmt	remote
SCR	silicon-controlled rectifier
sh met	sheet metal
skt	socket
sltd	slotted
sm	small
spdt	single-pole, double-throw
sq	square
sta	station
std	standard
sw	switch
symm.	symmetrical
sync	synchronized
t	tooth
Ta	tantalum
term	terminal
thd	thread
thk	thick
trk	track
V	volt
var	variable
vert	vertical
W	watt
w/	with
w/o	without
wht	white
ww	wire wound
xfmr	transformer
xport	transport
xstr	transistor
yel	yellow
4pdt	4-pole, double-throw
μ	micro
Ω	ohm

Table 8-3. Manufacturers Code Numbers and Addresses (1 of 3)

Code	Manufacturer	Address
0000A	Stettner-Thrush Inc.	Cazenovia, N.Y.
0000B	Scorpio Switch Corp.	Ft. Lauderdale, Fla.
00779	AMP, Inc.	Harrisburg, PA
01121	Allen Bradley Co.	Milwaukee, Wis.
01963	Cherry Electrical Products Corp.	Waukegan, Ill.
02660	Amphenol Connector Div. of Bunker-Ramo Corp.	Broadview, Ill.
02773	Robins Industries Corp, Data Products Div.	Commack, N.Y.
02799	Arco/LDP	Torrance, CA
03508	GE Semiconductor Products Div.	Syracuse, N.Y.
04009	Arrow-Hart, Inc.	Hartford, CT
04426	Licon Div. of Illinois Tool Works Inc.	Chicago, Ill.
04713	Motorola Inc., Semiconductor Products Div.	Phoenix, Ariz.
04810	Ashland Electric Products Inc.	Long Island, N.Y.
05972	Locktite Corp.	Newington, CT
06004	Bassick Div. of Stewart Warner Corp.	Bridgeport, CT
06383	Panduit Corp.	Tinley Park, Ill.
06540	Amatom Electronic Hardware Div. of Mite Corp.	New Haven, CT
06915	Richco Plastic Co.	Chicago, Ill.
07109	Oaktron Industries Inc.	Monroe, Wis.
07556	Calabro Plastics Inc., Unitrack Div.	Upper Darby, PA
07933	Semiconductor Div. of Raytheon Mfg. Co.	Mountain View, CA
08806	GE Miniature Lamp Dept.	Cleveland, Ohio
09071	Balfor Industries, Inc.	Bronx, N.Y.
09353	C and K Components	Watertown, Mass.
11983	Nortronics Co., Inc.	Minneapolis, Minn.
12040	National Semiconductor Corp.	Danbury, CT
12060	Diodes, Inc.	Chatsworth, CA
12284	Cambridge Thermionic Corp.	Cambridge, Mass.
13150	Vernitron Electrical Components Beau Products Div.	Laconia, N.H.
14403	Automatic Switch Co.	Los Angeles, CA
14655	Cornell-Dublier Electronics Div.	Newark, N.J.
16499	Accuride Div. of Standard Precision, Inc.	Santa Fe Springs, CA

Table 8-3. Manufacturers Code Numbers and Addresses (2 of 3)

Code	Manufacturer	Address
18796	Erie Technological Products Inc.	College, PA
23480	Electronic Hardware Corp.	Jamaica, N.Y.
23880	Stanford Applied Engineering	Santa Clara, CA
25430	Amperex Electronics Corp., Semiconductor and Microcircuits Div.	Slatersville, R.I.
26279	Greenlee Tool Co.	Rockford, Ill.
27014	National Semiconductor Corp.	Santa Clara, CA
27290	Regdon Corp.	Brookfield, Ill.
27264	Molex Products Co.	Downers Grove, Ill.
28480	Hewlett-Packard Co.	Palo Alto, CA
28520	Heyman Mfg. Co.	Kenilworth, N.J.
29337	Hoover Ball Div. of Hoover Ball and Bearing Co.	Erwin, Tenn.
29979	Midwec Div.	Scottsbluff, Neb.
31633	Wafe Bearing Products Div. of MPB Corp.	Milford, CT
32293	Intersil, Inc.	Cupertino, CA
33809	Texas Instruments, Inc.	Dallas, Tex.
37942	P.R. Mallory and Co., Inc.	Indianapolis, Ind.
43543	Nytronics Inc., Transformer Co. Div.	Alpha, N.J.
46384	Penn Engineering and Mfg. Co.	Doylestown, PA
50092	Glass Beads Co.	Latrobe, PA
50294	NMB Corp.	Chatsworth, CA
51705	ICO/Rally Div. of Rally Industries	Palo Alto, CA
56289	Sprague Electric Co.	North Adams, Mass.
66346	Minnesota Mining and Mfg. Co.,Minicom Div.	St. Paul, Minn.
70472	Associated Spring Co.	Bristol, CT
70903	Beldon Corp.	Chicago, Ill.
71002	Birnbach Radio Co.	New York, N.Y.
71400	McGraw-Edison Co., Bussman Mfg. Div.	St. Louis, Mo.
71468	ITT Cannon Electric, Inc.	Phoenix, Ariz.
71590	Centralab Electronics	Milwaukee, Wis.
71744	Chicago Miniature Lamp Works	Chicago, Ill.
71785	Cinch Mfg. Co., Howard Jones Div.	Chicago, Ill.

Table 8-3. Manufacturers Code Numbers and Addresses (3 of 3)

Code	Manufacturer	Address
71895	Delavan Mfg. Co.	West Des Moines, Iowa
71984	Dow Corning Corp.	Midland, Mass.
72136	Electromotive Mfg. Co., Inc.	Willimantic, CT
72653	G C Electronics Div. of Hydrometals	Rockford, Ill.
73445	Amperex Electronics Corp.	Hicksville, L.I., N.Y.
73484	Barwood Mfg. Corp.	Everett, Mass
73734	Federal Screw Products, Inc.	Chicago, Ill.
74542	Hoyt Electrical Instrument Works, Inc.	Penacook, N.H.
75915	Littlefuse, Inc.	Des Plaines, Ill.
77342	AMP Inc., Potter and Brumfield Div.	Princeton, Ind.
78488	Stackpole Carbon Co.	St. Marys, PA
78553	Tinnerman Products, Inc.	Cleveland, Ohio
79136	Tru Arc (Waldes Kohimoor Inc.)	Long Island City, N.J.
79727	C-W Industries	Warminster, PA
80031	Mepco/Electra, Inc.	Morristown, N.J.
80223	United Transformer Corp.	New York, N.Y.
80294	Bourns, Inc.	Riverside, CA
81095	Triad Transformer Corp.	Venice, CA
82389	Switchcraft, Inc	Chicago, Ill.
83259	Parker Seal	Culver City, CA
83330	Smith, Herman H., Inc.	Brooklyn, N.Y.
83486	Elco Industries	Rockford, Ill.
84970	Sarkes Tarzian Inc., Broadcast Equip. Div.	Bloomington, Ind.
88245	Litton Precision Products, USECO Div. of Litton Industries	Van Nuys, CA
89665	United Transformer Co.	Chicago, Ill.
91418	Radio Materials Co.	Chicago, Ill.
91506	Augat, Inc.	Attleboro, Mass.
93332	Sylvania Electric Products, Inc., Semiconductor Div.	Woburn, Mass.
95760	Caplug, Div. of Protective Closures Co., Inc.	Buffalo, N.Y.
95987	Weekesser Co., Inc.	Chicago, Ill.
96306	Microswitch Div. of Minneapolis-Honeywell	Freeport, Ill.
98159	Rubber Teck, Inc.	Gardena, CA
98410	ETC., Inc.	Cleveland, Ohio

Scully

Recording Instruments

Model 280B Series Recorder/Reproducers

Instruction and Maintenance Manual

ADDENDUM I

This addendum provides adjustment procedures for the constant tension feature of the Scully Model 280B

AUDIO/ELECTRONICS DIVISION OF DICTAPHONE CORPORATION
475 Ellis Street, Mountain View, California 94043 U.S.A.
(415) 968-8389 TLX 345524

CATALOG NO. 200612-01
March 1977
Printed in U.S.A.

Serial No.: _____

Date Received: _____

CONSTANT TENSION

1.1 GENERAL

1.2 The constant tension feature prevents changes in tape tension against the heads caused by the varying amount of tape on the supply reel or changes in tape speed. The tension sensor PWA, Figure 1, consists of an opto coupler and an optical grating which control the amount of light which reaches the transistor. The optical grating is mechanically connected to the tension sensor dancer arm. As the dancer arm moves in response to changes in tape tension, the tension sensor PWA initiates changes in the holdback voltage applied to the supply reel.

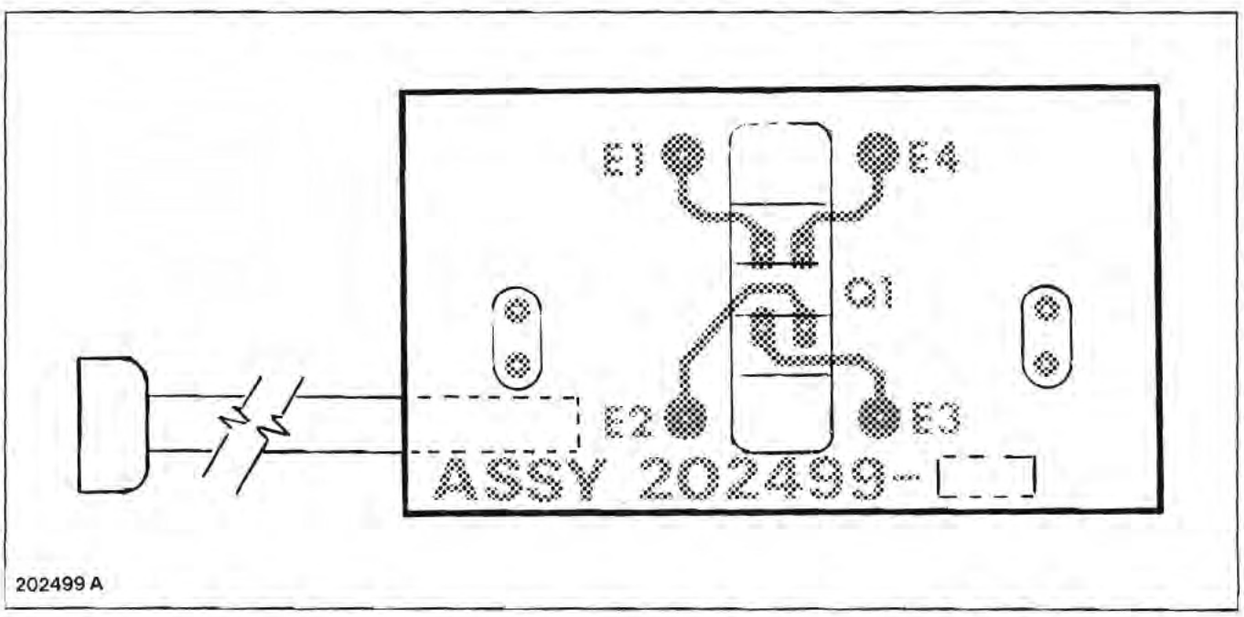

Figure 1. Tension Sensor PWA

1.3 Constant Tension Adjustment

CAUTION

High voltage is present on the tension sensor PWA.

a. Open the screw valve on the airpot until the damping effect is not noticeable.

b. Connect a Simpson Model 270 or equivalent VOM, set to the 250 Vac scale, across the supply motor terminals (J106 pin 3 and *NEUTRAL*.

c. Loosen the locknut on resistor R204 on the power supply. Turn R204 for a minimum resistance (fully ccw). Hold a piece of black paper in the slot of the opto coupler. Put the machine in Play mode and observe the VOM. It should indicate 85 ±5 volts rms.

d. Turn R204 cw until the voltage drops 3 volts rms. Record this voltage. Tighten the lock nut on R204.

e. Check that the optical grating is rotating in the center of the opto coupler slot as shown in Figure 2a and 2b.

f. Loosen the setscrew on the coupler, Figure 2a, and move the dancer arm to the fully ccw (from the top) position. Position the optical grating for minimum voltage reading across the motor. The VOM should indicate 8 ±3 volts rms.

g. Move the dancer arm to the 7:00 o'clock position (from the top). The voltage should be the same as recorded in step d.

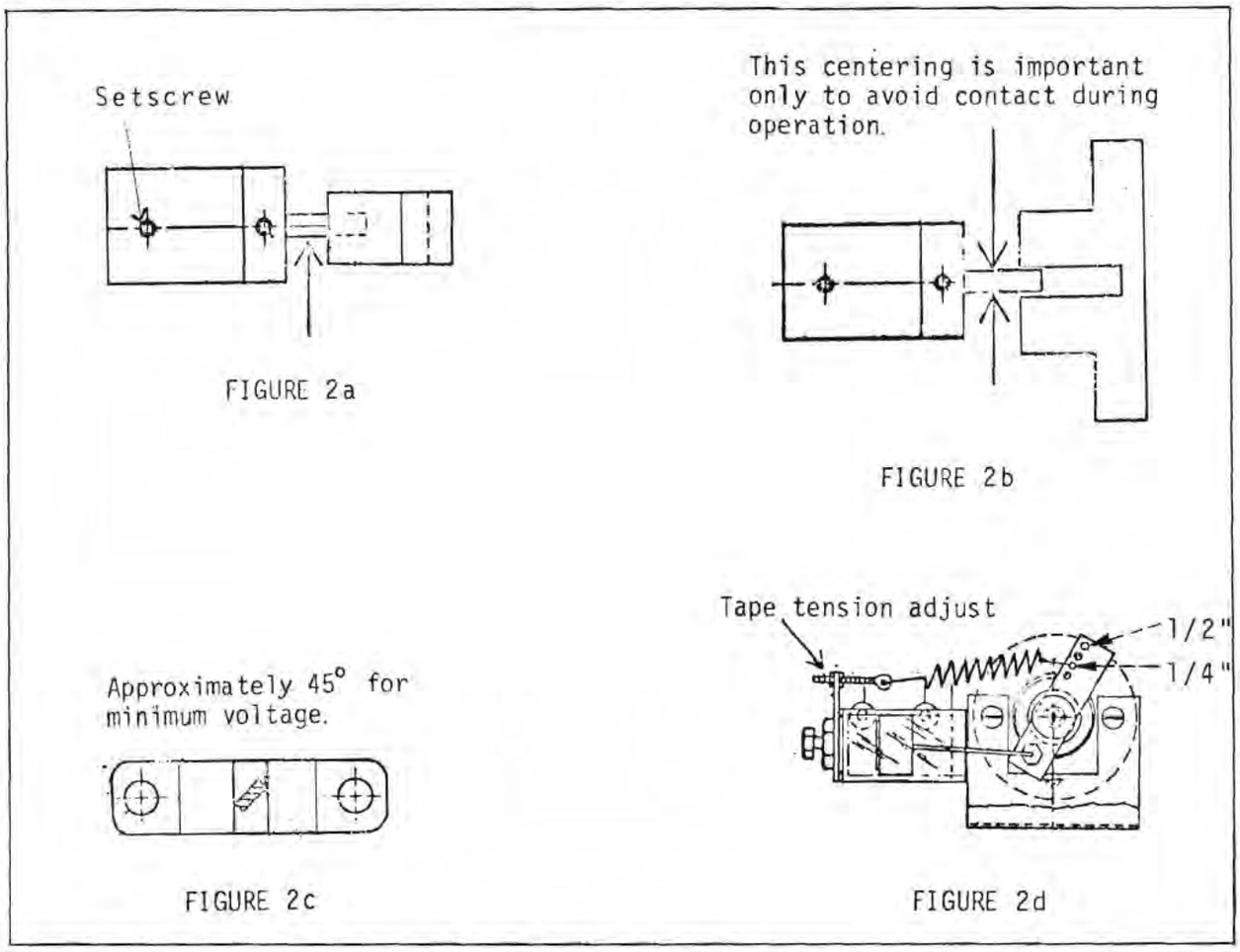

Figure 2. Adjustment Procedures

h. Place a tape tensiometer on the tape between head bridge and capstan. Adjust spring on constant tension, figure 2d, to obtain proper tension as shown below:

0.25-in tape = 3.5 to 4.5 oz

0.50-in tape = 7 to 8 oz

i. Close screw valve on airpot until the damping effect causes the arm to bounce as it returns to the stop. Open screw valve enough to allow smooth travel of the arm. Open screw valve one complete rotation.

202675

APPLICATION		REVISIONS			
NEXT ASSY	MODEL	ISSUE	DESCRIPTION	SIGNATURE	DATE
[illegible]	2300/2348	A	PROD. RELEASE		[illegible]
	-01 ONLY	B	11 N 1963 A	[illegible]	[illegible]

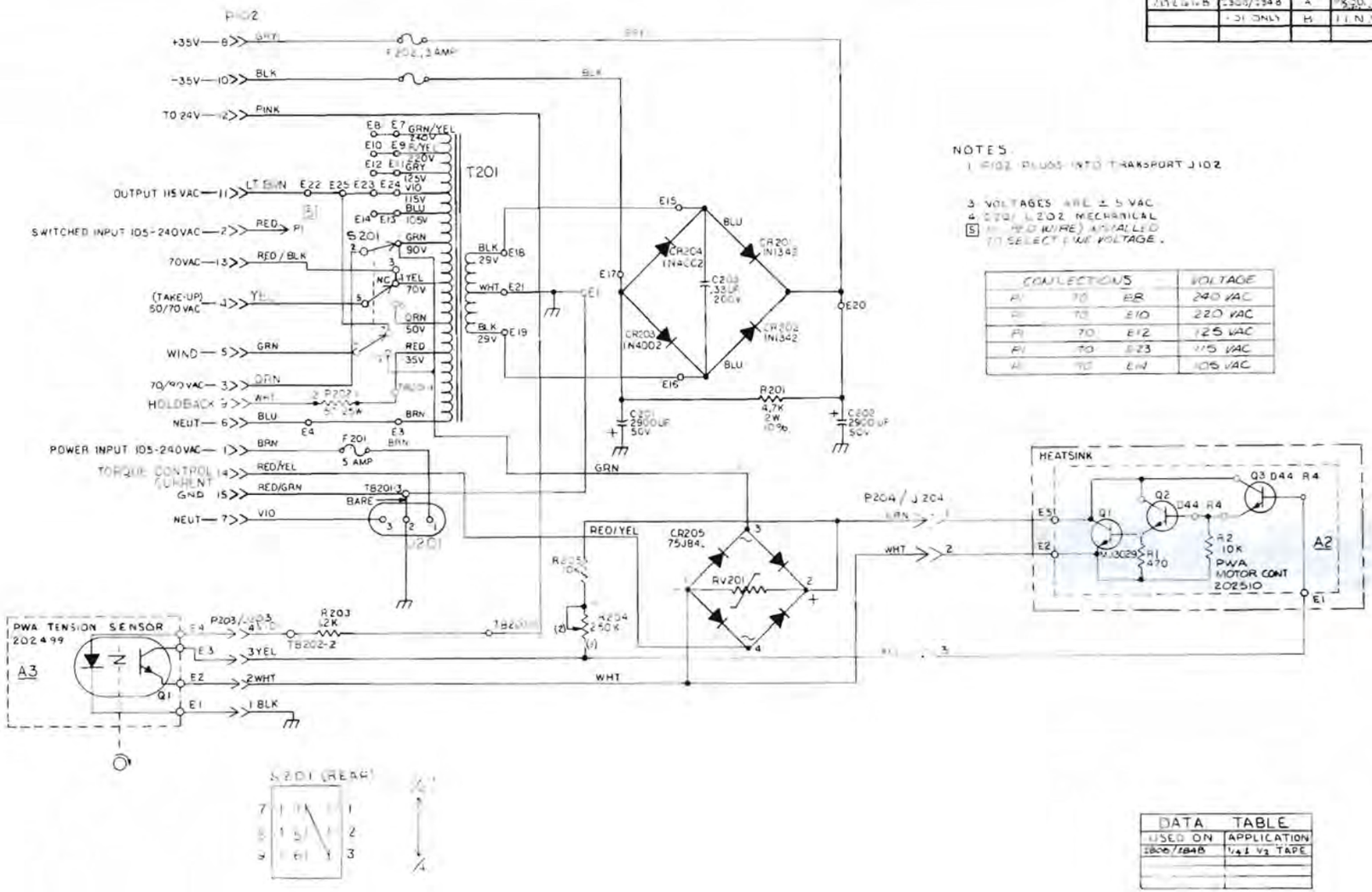

NOTES:

1. P102 PLUGS INTO TRANSPORT J102.
3. VOLTAGES ARE ± 5 VAC.
4. C201, L202 MECHANICAL.
5. [illegible] (WIRE) INSTALLED TO SELECT LINE VOLTAGE.

CONNECTIONS			VOLTAGE
P1	TO	E8	240 VAC
P1	TO	E10	220 VAC
P1	TO	E12	125 VAC
P1	TO	E23	115 VAC
P1	TO	E14	105 VAC

DATA TABLE	
USED ON	APPLICATION
2300/2348	1/4 & 1/2 TAPE

MATERIAL	DRAWN P. DEGRESSI	**Scully/Metrotech** DIVISIONS OF DICTAPHONE
	CHECKED	TITLE PRIMARY POWER SUPPLY, SCHEMATIC
FINISH	APPROVED	
	APPROVED	SCALE NONE
	UNLESS OTHERWISE SPECIFIED: DIMENSIONS ARE IN INCHES TOLERANCES: .XX ± .XXX ± ANGLES ±	SIZE D DRAWING NO. 202675 SHEET 1 OF 1

Scully

Recording Instruments

Model 280B Series Recorder/Reproducers

Instruction and Maintenance Manual

APPENDIX E

This appendix provides installation, operation, and maintenance instructions for the 285B Tape Reproducer. Information contained in this appendix includes data applicable only to the 285B which is not covered in the 280B technical manual.

AUDIO/ELECTRONICS DIVISION OF DICTAPHONE CORPORATION
475 Ellis Street, Mountain View, California 94043 U.S.A.
(415) 968-8389 TLX 345524

Serial No.: _____

Date Received: _____

March 1977
Catalog No. 202378-01
Printed in U.S.A.

CONTENTS

Section		Page
I	GENERAL INFORMATION	1-1
	1.1 General	1-1
	1.3 Head Assembly	1-1
	1.5 Electronics Assembly	1-3
	1.7 Optional and Accessory Equipment	1-3
II	INSTALLATION	2-1
	2.1 General	2-1
	2.3 Cabling Interconnections	2-1
	2.3 Performance Checks	2-2
III	OPERATION	3-1
	3.1 General	3-1
	3.3 Operating Controls	3-1
IV	THEORY OF OPERATION	4-1
	4.1 General	4-1
	4.3 Electronics Assembly	4-1
	4.7 Power Supply	4-3
V	TRANSPORT MAINTENANCE	5-1

CONTENTS (Continued)

Section		Page
VI	ELECTRONICS MAINTENANCE	6-1
	6.1 Preventive Maintenance	6-1
	6.3 Checkout and Alignment Procedures	6-1
	6.5 Test Equipment Required	6-1
	6.7 Preliminary Procedures	6-2
	6.9 Power Supply	6-2
	6.11 Logic Functions	6-2
	6.13 Playback Head Azimuth	6-4
	6.15 Level and Equalization	6-5
	6.17 Signal-to-Noise, *LINE OUTPUT*	6-5
	6.19 Noise Level, *SPEAKER OUTPUT*	6-5
	6.21 *LINE OUTPUT* Distortion	6-7
	6.23 *SPEAKER OUTPUT* Distortion	6-7
	6.25 Flutter	6-7
VII	SCHEMATICS, PARTS LISTS AND RELATED DATA	7-1

ILLUSTRATIONS

Figure		Page
1-1.	Scully Model 285B Tape Reproducer Installed in Accessory Console	1-0
2-1.	Mounting Dimensions	2-1
2-2.	285B Interconnection Diagram	2-3
2-3.	Rear View of 285B Showing Location of Connectors	2-5
3-1.	Controls and Indicators	3-1
4-1.	285B Reproduce System Block Diagram	4-2
6-1.	Initial Test Setup	6-3
6-2.	Power Supply Voltage Adjustment	6-4
6-3.	Equalization and Level Adjustment Points	6-6

ILLUSTRATIONS (Continued)

Figure		Page
7-1.	Two Channel Amplifier Schematic Diagram	7-3
7-2.	Relay Control Chassis Interconnect, Schematic Diagram	7-5
7-3.	Power Supply Schematic Diagram	7-7
7-4.	Audio Interconnect Harness Assembly	7-9
7-5.	Model 285B Reproducer, Final Assembly (not illustrated)	7-11
7-6.	Transport Assembly	7-12
7-7.	Transport Subassembly	7-19
7-8.	Transport Control Chassis Assembly	7-24
7-9.	Transport Control Panel Harness Assembly	7-27
7-10.	Harness Assembly, Transport Control Power	7-30
7-11.	Harness Assembly, Transport Control Logic	7-32
7-12.	Harness Assembly, Audio Control	7-35
7-13.	Head Bridge Assembly	7-36
7-14.	Reel Stabilizer Assembly, 0.25 Tape	7-38
7-15.	Play Electronics Assembly	7-41
7-16.	Amplifier PWA, 2-Channel, Audio	7-42
7-17.	Power Supply Assembly	7-47
7-18.	Playback Head Stack Assembly, Full-Track, 0.25-Inch	7-51
7-19.	Harness Assembly, Audio Interconnect	7-52
7-20.	Scrape Filter Mount Assembly	7-53

TABLES

Table		Page
1-1.	Models of 285B Tape Reproducer	1-1
1-2.	Specifications	1-2

Figure 1-1. Scully Model 285B Tape Reproducer Installed in Accessory Console

SECTION 1
GENERAL INFORMATION

1.1 GENERAL

1.2 The Scully 285B Tape Reproducer, Figure 1-1, is a professional quality playback or edit system for broadcast and studio applications. The system is contained in one assembly and can be mounted in a standard 19-inch (48.26 cm) equipment rack or in the accessory console illustrated in Figure 1-1. The configurations of the 285B series are listed in Table 1-1. Complete specifications are contained in Table 1-2. All models use 0.25-inch tape.

Table 1-1. Models of 285B Tape Reproducer

MODEL NUMBER	*DESCRIPTION*
285B-FT	Full-Track Monophonic
285B-2	Two-Channel Stereophonic, Two Track
285B-24	Two-Channel Stereophonic, Four Track

1.3 HEAD ASSEMBLY

1.4 The head assembly contains three head stacks: playback and two dummies. The playback stack contains a full-, half-, or quarter-track head (refer to Table 1-1). Automatic tape lifters and a unique head arrangement provide for straight-line threading path and highly efficient fast-wind capability. The head assembly is readily accessible for adjustment and the mounting is simple; electrical connection

Table 1-2. Specifications (1 of 2)

FREQUENCY RESPONSE*	15 in/s (381 mm/s) ±2 dB, 30 Hz to 18 kHz 7.5 in/s (190.5 mm/s) ±2 dB, 30 Hz to 15 kHz 3.75 in/s (95.2 mm/s) ±2 dB, 30 Hz to 10 kHz
SIGNAL-TO-NOISE RATIO	(Using bulk erased 3M 206 tape or equivalent) Peak record level (500 nWb/m) to NAB weighted noise

TAPE SPEED	*FULL TRACK*	*TWO TRACK*	*QUARTER TRACK*
15 in/s	72 dB	68 dB	65 dB
7.5 in/s	72 dB	68 dB	65 dB
3.75 in/s	68 dB	64 dB	61 dB

FLUTTER AND WOW	Weighted peak flutter (ANSI S4.3-1972; IEC 386-1972) using a prerecorded flutter tape 15 in/s – 0.08% 7.5 in/s – 0.1% 3.75 in/s – 0.2%
DISTORTION	Recorded on 280B using 3M 206 tape, 3rd harmonic distortion of 500-Hz signal at 500 nWb/m is less than 3%; at standard operating level (250 nWb/m) is less than 0.6%. Speaker out 1% at 3.0 Watts into 8-Ohm resistive load.
OUTPUTS	Line +17 dBm into 600-Ohm load. Speaker 3.0 Watts into 8-Ohm resistive load.
EQUALIZATION	Automatically switched with transport speed. Specify NAB or IEC (CCIR).

*Full track and two track only. Quarter track approximates same response. Measurements available on request.

Table 1-2. Specifications (2 of 2)

SPEED ACCURACY	±0.2% throughout reel at all speeds using 1.5-mil tape.
REEL SIZES	To 11.5 in (CCIR).
BRAKES	Dynamic plus disc.
POWER REQUIREMENTS	105-125 Vac and/or 220-240 V (50 or 60 Hz). Power consumption at 117V, 60 Hz: 250 VA.
SHIPPING WEIGHTS (approx.)	Standard carton, unmounted 90 pounds gross. Empty console 105 pounds.

to the playback head is through a plug-in cable. The heads are mounted on a bridge assembly so that they may be conveniently exchanged to adapt to any desired track configuration.

1.5 ELECTRONICS ASSEMBLY

1.6 The electronics assembly is contained in an enclosure mounted under the transport tape deck. It consists of a two-channel amplifier. All adjustments are accessible from the top of the tape deck by removing the head cover.

1.7 OPTIONAL AND ACCESSORY EQUIPMENT

1.8 The remote control and 50-Hz and/or 220-volt power input options and accessories are available with the 285B Reproducer.

SECTION 2
INSTALLATION

2.1 GENERAL

2.2 The 285B is installed in the same manner described in the 280B technical manual. Figure 2-1 shows the mounting dimensions of the 285B.

2.3 CABLING INTERCONNECTIONS

2.4 Interconnect the reproducer as shown in Figure 2-2 and detailed below. Connector locations are shown in Figure 2-3.

a. Check that dummy plug P110 is installed in J110 on the transport control chassis.

b. If the remote control assembly is used, connect its cable to remote socket J111 on the transport control chassis.

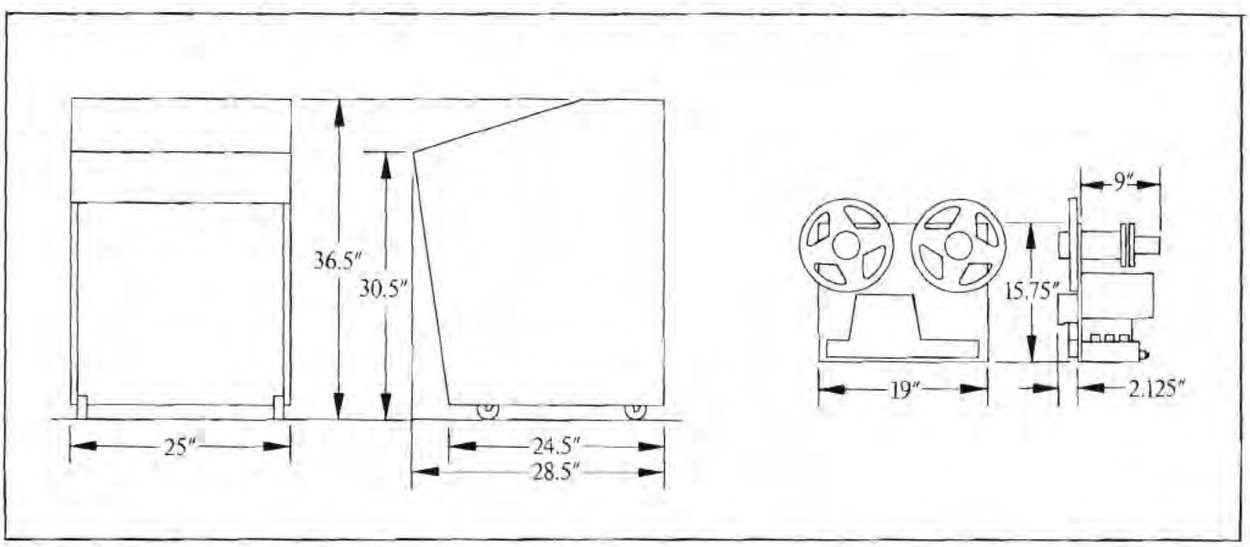

Figure 2-1. Mounting Dimensions

c. A female XLR-type connector is required to connect each output of the reproducer. These connectors are plugged into the *LINE OUTPUT* receptacles J133 and J134 provided on the back of the power supply assembly.

d. Connect external speakers to *SPEAKER OUTPUT* terminal board *TB1* on the back of the power supply.

e. If headphones are used, connect them to the *PHONES* jack on the transport control panel.

CAUTION

Monaural headphones must not be used in a stereo phone jack.

CAUTION

Check that the *TAPE TENSION* switch located on the side of the power supply assembly, Figure 2-3, is in the *1/4* position.

f. Connect cable W4 between ac power plug J201 on the power supply and a 115-120 volt, 50/60-Hz power source. If the reproducer is operated at a different line voltage, the jumper on the power transformer input winding should be changed (see Figure 7-3). Assure proper system grounding and completely check all cabling before applying power.

2.3 PERFORMANCE CHECKS

2.4 After completion of the installation and cabling check, a series of performance tests should be made as described in Section 6.

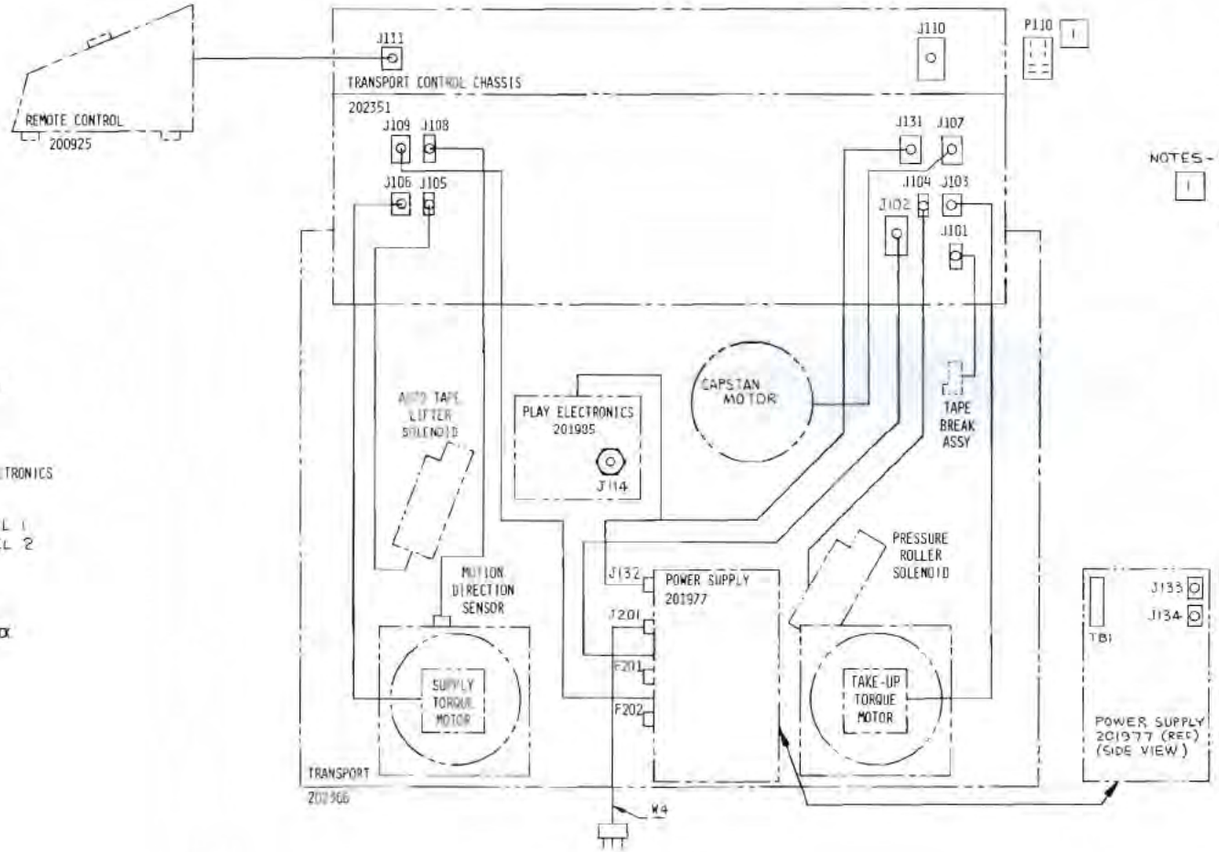

NOTES - UNLESS OTHERWISE SPECIFIED:

1. P110, DUMMY MUST BE INSTALLED AND WITH JUMPER IN PLACE AS SHOWN (202376) WHEN SERVO IS NOT USED.

CONNECTOR DESIGNATION LEGEND

J101 TAPE BREAK
J102 MAIN POWER SUPPLY
J103 TORQUE MOTOR-TAKE-UP
J104 SOLENOID, PRESSURE ROLLER
J105 SOLENOID, AUTO TAPE LIFTER
J106 TORQUE MOTOR, SUPPLY
J107 CAPSTAN MOTOR
J108 MOTION DIRECTION SENSOR
J109 ELECTRONICS POWER
J110 INVERTER SOCKET, SERVO ELECTRONICS
J111 REMOTE SOCKET
J114 PLAY HEAD BRIDGE SOCKET
J133 LINE OUTPUT, CHANNEL 1
J134 LINE OUTPUT, CHANNEL 2
J201 A.C. POWER
TB1-1,2 SPEAKER OUT, CHANNEL 1
TB1-4,5 SPEAKER OUT, CHANNEL 2
J130 PLAY ELECTRONICS
J131 VOLUME CONTROLS AND PHONE JACK

CABLE - PLUG IDENTIFICATION	
CABLE NO.	PART NO.
W4	160126

Figure 2-2. 285B Interconnection Diagram

SECTION 3
OPERATION

3.1 GENERAL

3.2 Operating controls for the 285B are located on the front panel of the tape transport assembly, Figure 3-1. The transport control pushbuttons contain lamps to indicate the mode of operation of the transport. Controls for the 285B are identical to those of the 280B except for the *VOLUME* control and the *PHONES* jack.

3.3 OPERATING CONTROLS

- *VOLUME* control *CH 1* (outer knob)
  Controls loudness of the speaker or headphones connected to channel 1.

- *VOLUME* control *CH 2* (inner knob)
  Controls loudness of the speaker or headphones connected to channel 2.

Figure 3-1. Controls and Indicators

- *PHONES* jack

  Provides connections for headphones to the output of the reproducer. Disconnects speaker circuit when headphones are inserted.

CAUTION

Monaural headphones must not be used in a stereo phone jack.

SECTION 4
THEORY OF OPERATION

4.1 GENERAL

4.2 The 285B theory of operation for the tape transport is identical to the 280B. The electronics assembly is discussed in this section.

4.3 ELECTRONICS ASSEMBLY

4.4 The electronics assembly consists of the play head on the tape deck and the two-channel audio amplifier printed wiring assembly. The two-channel audio amplifier, Figures 4-1 and 7-1, contains two identical amplifier circuits. The following discussion covers channel 1.

4.5 The audio signal from the play head is connected through J114 and J130, on the play electronics assembly, to a preamplifier circuit consisting of Q1, Q3 and associated components. High or low speed equalization is selected by the *CAPSTAN LOW/HIGH* switch on the transport control panel through the transport logic PWA and applied to analog switch U1 and inverter Q5. The amplifiers of U1 close the solid state relay contacts when +2.5 to +5.5 volts appears at their inputs and open when 0 to +0.4 volt appears at their inputs. Equalization is adjusted by variable resistors R9 (*LO*) and R7 (*HI*). The amplitude of the preamplifier output (Q3 collector) is adjusted by R23 and applied to the input of power amplifier U2. U2 raises the level of the equalized audio signal to provide the 600-ohm output through the line output audio transformer (T1).

4.6 The audio output of line driver U2 is also applied to *VOLUME* control R101 on the transport control chassis assembly. The wiper of the *VOLUME* control is connected by the audio interconnect harness

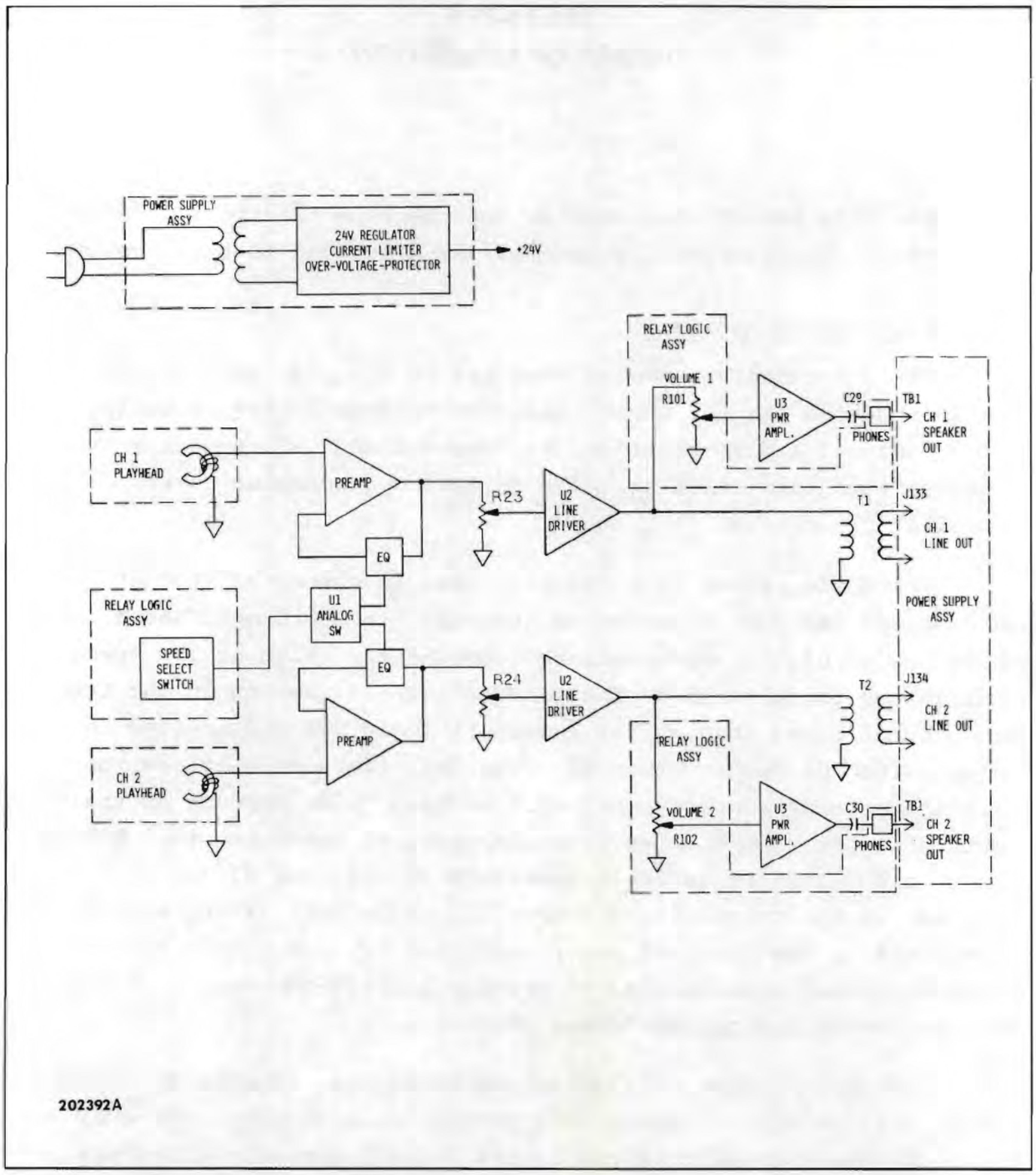

Figure 4-1. 285B Reproduce System Block Diagram

assembly back to pin 6 of power amplifier U3 in the play electronics assembly. The power amplifier raises the level of audio signal to a level sufficient to drive the headset or an external 8-ohm impedance speaker. The output of U3 is connected to *PHONES* jack J133 on the transport control chassis, then to the *SPEAKER OUTPUT* terminal block on the power supply assembly. When headphones are plugged into the *PHONES* jack, the connection to the speaker is opened.

4.7 POWER SUPPLY

4.8 The power transformer has a tapped primary winding to compensate for different power sources. The transformer is factory wired for 115-120 volt, 50/60 Hz power source. If the reproducer is operated at a different line voltage, the jumper on the power transformer input winding should be changed (see Figure 7-3). The output of the power transformer is applied to a commercial power supply regulator (PSR1). The regulator has three adjustments which are set at the factory. They are current limit, overvoltage protection and output voltage adjust. It is not recommended that the adjustments be changed in the field except for the possible exception of the output voltage adjustments as explained in Section 6, ELECTRONICS MAINTENANCE.

SECTION 5
TRANSPORT MAINTENANCE

Transport maintenance of the 285B is identical to the 280B.

SECTION 6
ELECTRONICS MAINTENANCE

6.1 PREVENTIVE MAINTENANCE

6.2 Preventive maintenance of the electronics consists of cleaning and visual inspection of components and wiring. At frequent intervals, remove any accumulations of dirt, dust, and foreign objects. Inspect for loose connectors, broken contacts, frayed or broken wiring, overheated components, or other visible signs of trouble. Check that printed wiring assemblies are firmly seated in their connectors.

6.3 CHECKOUT AND ALIGNMENT PROCEDURES

6.4 The following checkout and alignment procedures should be performed at the time of installation and at other times deemed desirable by the user. In stereo machines, these procedures must be repeated for each channel. The degaussing and head alignment procedures described in Section 5 of the 280B manual should be performed prior to any checkout and alignment.

6.5 Test Equipment Required

6.6 The following test equipment, or equivalent, is required to perform the checkout and alignment procedures and for troubleshooting the machine:

Recording tape

Distortion Analyzer (capable of reading Third Harmonic Distortion)

AC Voltmeter, Hewlett-Packard Model 400F

Flutter Meter, BHK Electronics Model F2

Oscilloscope, Tektronix Model 502

Head Demagnetizer

Volt-Ohm-Milliammeter, Simpson Model 260

Weighting Filter, ASA "A" Curve Standard S1.4-1961
600 ±1%-ohm resistors
8 ±1%-ohm, 10W or larger resistors, non inductive
Alignment tape: 200 nWb/m
Alignment tape: 250 nWb/m
Azimuth alignment tape:
7.5 in/s – 16 kHz at 250 nWb/m
15 in/s – 16 kHz at 250 nWb/m

6.7 Preliminary Procedures

6.8 To perform the following procedures, make the test setup shown in Figure 6-1 and proceed as follows:

a. Thread tape on machine.

b. Set controls as follows:

CAPSTAN speed selector switch to *HIGH*
TENSION switches to proper position for reel sizes

c. Install a 600-ohm load resistor across the *LINE OUTPUT* plug.

6.9 Power Supply

6.10 Plug the machine into a source of power and measure the voltage of the B+ buss. It should be +24 ±2 volts dc on the logic chassis. If it is not, adjust the power supply regulator output voltage adjust screw, Figure 6-2.

6.11 Logic Functions

6.12 Operate the machine in all modes of operation: *STOP*, *PLAY*, *EDIT*, *FAST FORWARD*, and *FAST REWIND*.

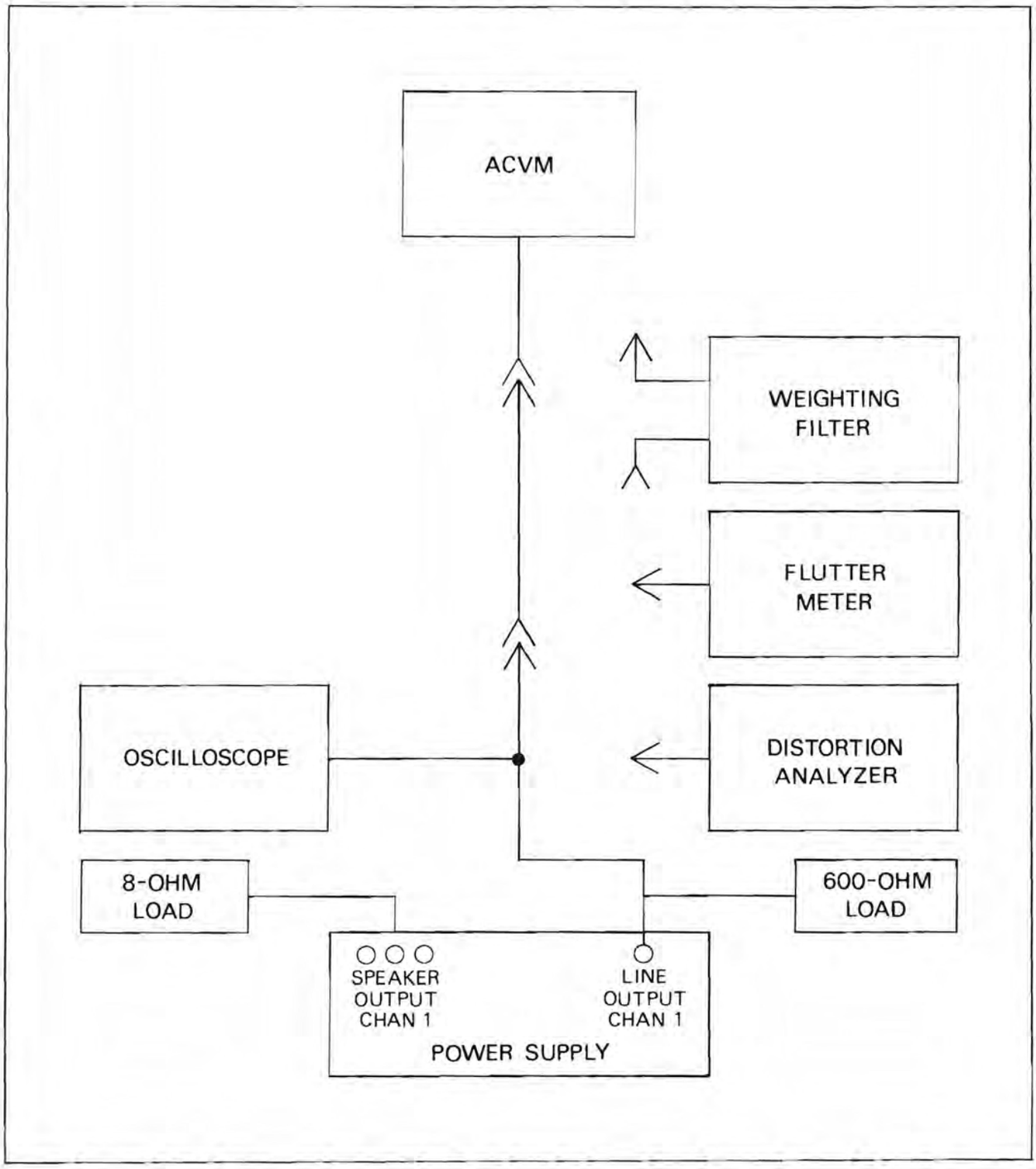

Figure 6-1. Initial Test Setup

6.13 Playback Head Azimuth

6.14 Install azimuth alignment tape and while playing back at 16 kHz, adjust the rotation and then the azimuth, of the play head only, for the maximum reading on the AC Voltmeter.

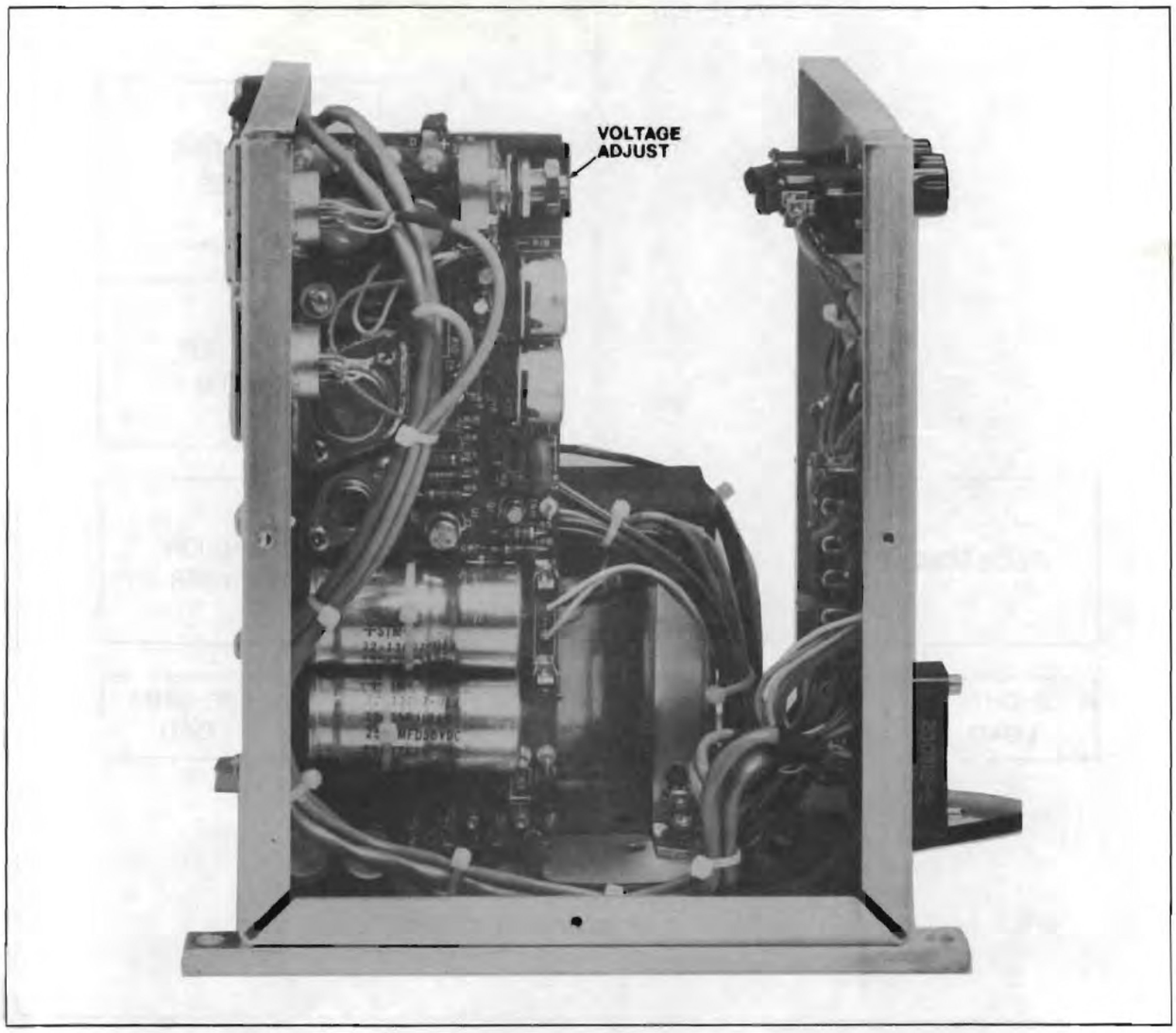

Figure 6-2. Power Supply Voltage Adjustment

6.15 Level and Equalization

6.16 Install 250 nWb/m alignment tape for 7.5-15 in/s full track and 2-channel 2 track. Install 200 nWb/m alignment tape for all other reproducer tape speeds and track-channel configurations. Connect ACVM to *LINE OUTPUT* connectors. Remove head cover. Adjust level and then equalization in accordance with the following chart (see Figure 6-3 and inside head cover for location of adjustments).

CHANNEL NO.	*FREQUENCY*	*ADJUST*	*FOR*
1 High Speed	1 kHz	*LEVEL CH 1*	+4 dBm
2 High Speed	1 kHz	*LEVEL CH 2*	+4 dBm
1 High Speed	10 kHz	*HI CH 1*	+4 dBm
2 High Speed	10 kHz	*HI CH 2*	+4 dBm
1 Low Speed	10 kHz	*LO CH 1*	+4 dBm
2 Low Speed	10 kHz	*LO CH 2*	+4 dBm

6.17 Signal-to-Noise, *LINE OUTPUT*

6.18 Connect *LINE OUTPUT CHAN 1* to ASA-A weighted filter and the filter to the ACVM. Install a bulk-degaussed roll of tape on the machine. Press *START* pushbutton. The ACVM should indicate a maximum level indicated below after correcting for the insertion loss of the filter (reference 500 nWb/m).

TAPE SPEED	*FULL TRACK*	*2 TRACK*	*4 TRACK*
3.75	68 dB	64 dB	61 dB
7.5	72 dB	68 dB	65 dB
15.0	72 dB	68 dB	65 dB

6.19 Noise Level, *SPEAKER OUTPUT*

6.20 With ACVM and filter connected as in step 6-18, install the 8-ohm load resistor across *SPEAKER OUTPUT CHAN 1*. Set *VOLUME* control

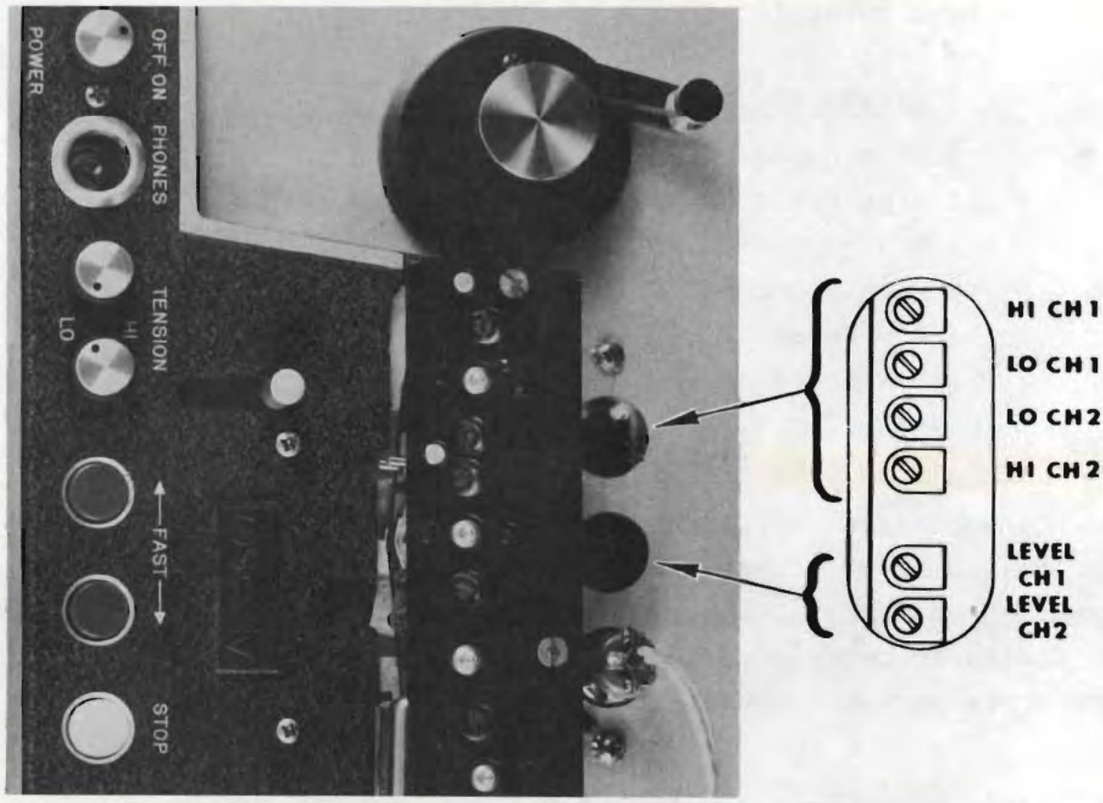

Figure 6-3. Equalization and Level Adjustment Points

fully clockwise. With reproducer in Stop mode, ACVM should indicate a level less than -26 dBm. Repeat for channel 2.

6.21 *LINE OUTPUT* Distortion

6.22 Connect *LINE OUTPUT CHAN 1* to the distortion analyzer. Reproduce a 500-Hz signal recorded at standard playback fluxivity (250 nWb/m and less than 0.6% total harmonic distortion for 7.5-15 in/s full track and 2-channel 2-track machines and 200 nWb/m for all other reproducer tape speeds and track-channel configurations). The third harmonic distortion of the reproducer should be less than 0.6%. Repeat for channel 2.

6.23 *SPEAKER OUTPUT* Distortion

6.24 Connect distortion analyzer across *SPEAKER OUTPUT CHAN 1* with the 8-ohm load in parallel. Adjust *VOLUME* control to 3W output. Third harmonic distortion should be less than 1% more than measured in paragraph 6.22.

6.25 Flutter

6.26 Connect *LINE OUTPUT CHAN 1* to flutter meter. Install flutter test tape. Set the flutter meter to (ANSI S4.3-1972; IEC 386-1972) *PEAK WEIGHTED*. Start the machine. Flutter should be less than the values listed below. Repeat for channel 2.

SPEED in/s	*MAXIMUM FLUTTER*
3.75	0.2%
7.5	0.1%
15.0	0.08%

SECTION 7
SCHEMATICS, PARTS LISTS AND RELATED DATA

This section contains the schematic diagrams and a replaceable parts list of those assemblies of the 285B which are different than the Model 280B.

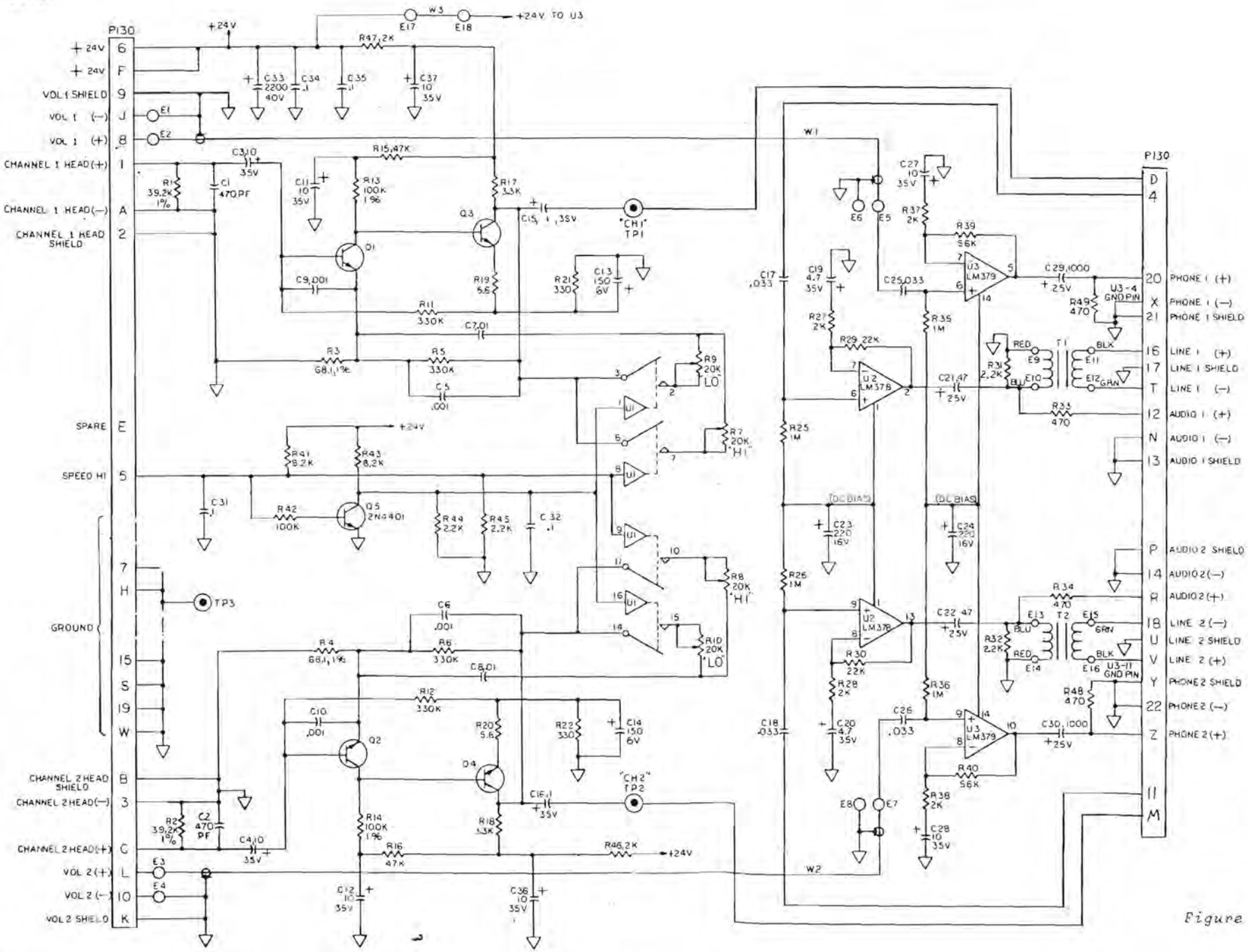

INTEGRATED CIRCUIT DATA			
TYPE	+24V	GND	NC
U1-LF13331	12	4, 5	13
U2-LM378	14	3,4,5,10,11,12	
U3-LM379	1	3,4,11,12	2,13

NOTES: UNLESS OTHERWISE SPECIFIED:
1. ALL RESISTORS VALUES ARE IN OHMS 1/4W ± 5%.
2. ALL CAPACITANCE VALUES ARE IN UF.
3. ALL TRANSISTOR ARE 2N5089.

REF. DESIGNATION	
LAST USED	NOT USED
R49	
C37	
Q5	
U3	
T2	
TP3	
E18	

Figure 7-1. Two Channel Amplifier Schematic Diagram

201982A

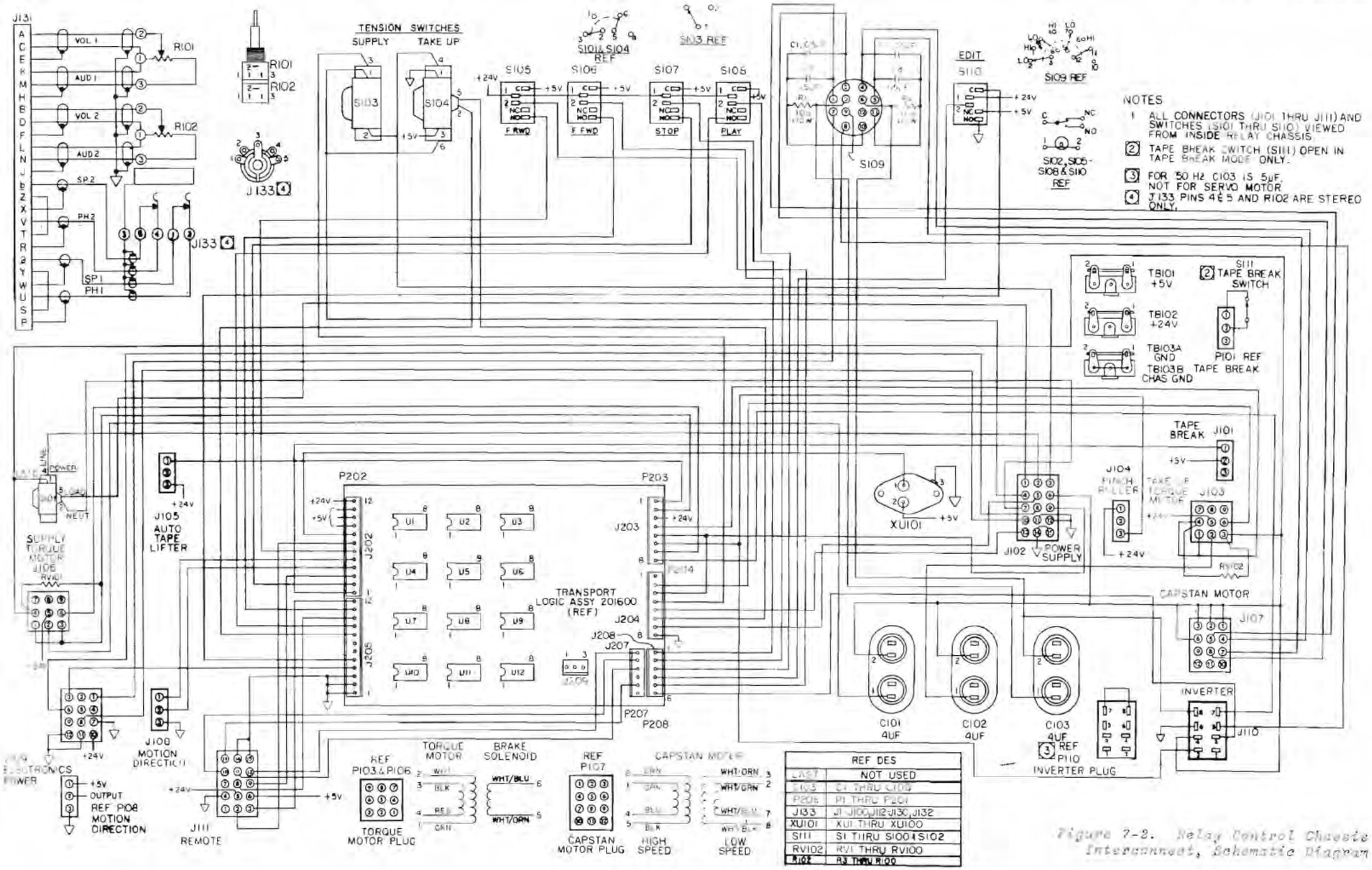

Figure 7-2. Relay Control Chassis Interconnect, Schematic Diagram

202342 ‹2

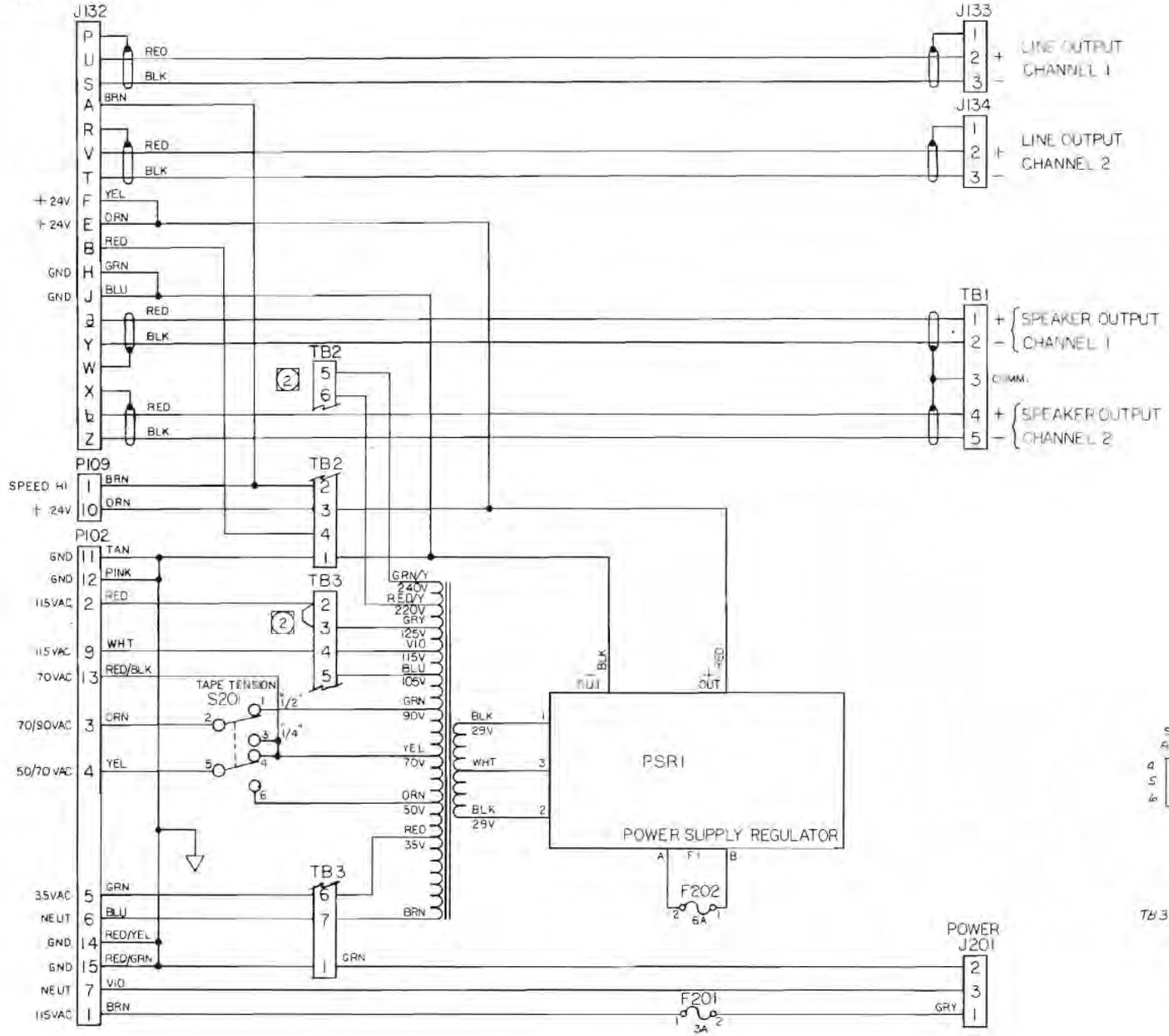

NOTES:

1. AC VOLTAGES ARE ± 5 VAC.

(2) JUMPER WIRE PROVIDED FOR OPTIONAL VOLTAGE SELECTION.

VOLTAGE	FROM	TO
105	TB3-2	TB3-5
115	TB3-2	TB3-4
125	TB3-2	TB3-3
220	TB3-2	TB2-6
240	TB3-2	TB2-5

REF. DESIGNATION	
LAST USED	NOT USED
F202	F1 THRU F200
S201	S1 THRU S200
TB3	
T201	T1 THRU T200
J201	J1 THRU J131, J135 THRU J200
P109	P1 THRU P101, P103 THRU P108

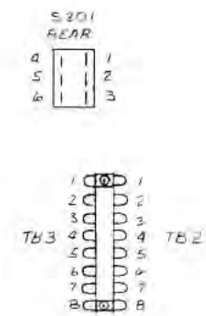

Figure 7-3. Power Supply Schematic Diagram

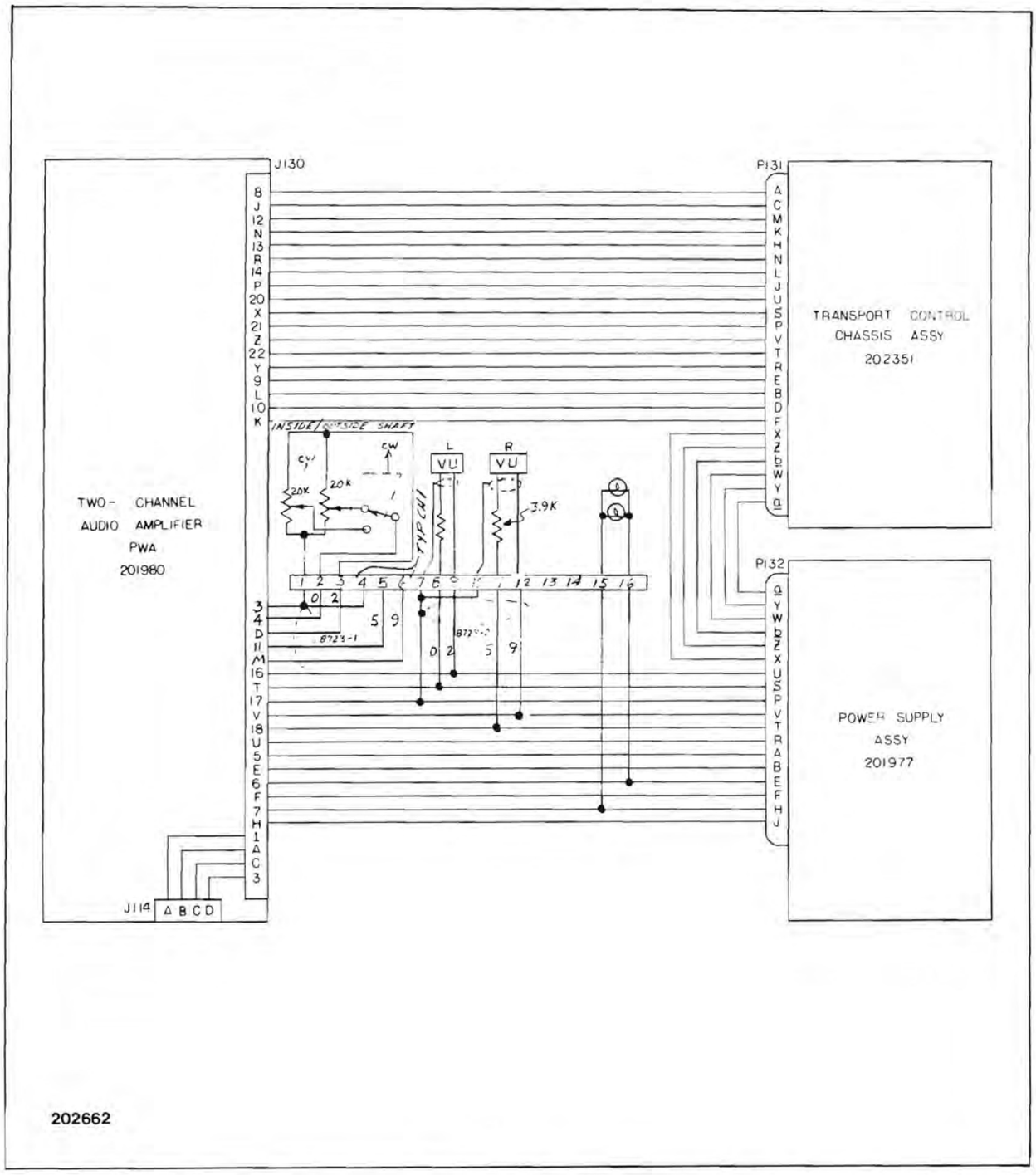

Figure 7-4. Audio Interconnect Harness Assembly

SECTION 7
SCHEMATICS, PARTS LISTS AND RELATED DATA

This section contains the schematic diagrams and a replaceable parts list of those assemblies of the 285B which are different than the Model 280B.

Table 7-1. Parts List

FIG. & REF.	QUANTITY PER ASSEMBLY -01	-02	-03				DESCRIPTION	PART NO.	MFR. PART NO.	CODE IDENT. NO.
7-5†	1	-	-				Model 285B-FT Reproducer, final assy	201930-01		
	-	1	-				Model 285B-2 Reproducer, final assy	201930-02		
	-	-	1				Model 285B-24 Reproducer, final assy	201930-03		
-1	1	-	-				Transport assy, mono, FT, 0.25 (see Fig. 7-6 for bkdn)	202366-01		
-2	-	1	-				Transport assy, stereo, 2 trk, 0.25 (see Fig. 7-6 for bkdn)	202366-02		
-3	-	-	1				Transport assy, 1/4 trk, 0.25 (see Fig. 7-6 for bkdn)	202366-03		
-8	8	8	8				Screw, ovh, 10-32x5/8	110217		
-9	8	8	8				Washer, #10, "CA" padded, brs	111104	N/P C1812	73484
-10	1	1	1				Reel, 10.5, met, empty, 0.25	112171	RB-1/4x10.5	66346
-14	1	1	1				Console assy, mono/stereo*	201931-01		
-18	(1)	(1)	(1)				Remote control assy, panel mount** (see Fig. 7-66 in 280B manual for bkdn)	200925-04		
-17	(1)	(1)	(1)				Remote control assy, table mount** (see Fig. 7-66 in 280B manual for bkdn)	200925-03		
-21	-	1	1				Conversion kit, stereo to FT mono*	202390-01		
-11	1	1	1				Conn, plug, 15-hole	160040	1625-15P	27264
-12	15	15	15				Term, pin, 0.062 dia, male, 22 ga	160030	1854	27264
-16	1	1	1				Tape splicer, 0.25*	183019	TS8D	02773
-19	1	1	1				Head demagnitizer*	183017	30112-2J50	72653
-20	1	1	1				Head cleaning pads*	183018	22-9000	09071
-22	1	-	-				Conversion kit, FT mono to stereo*	202391-01		

*Accessory or option
**Select one
†This Fig. not illustrated.

Table 7-1. Parts List

FIG. & REF.	QUANTITY PER ASSEMBLY -01	-02	-03				DESCRIPTION	PART NO.	MFR. PART NO.	CODE IDENT. NO.
7-6	1	-	-				Transport assy, FT, 0.25 (see Fig. 7-5 for NHA)	202366-01		
7-6	-	1	-				Transport assy, 1 & 2 trk, 0.25 (see Fig. 7-5 for NHA)	202366-02		
7-6	-	-	1				Transport assy, 1/4 trk, 0.25 (see Fig. 7-5 for NHA)	202366-03		
1	1	-	-				Transport subassy, mono (see Fig. 7-7 for bkdn)	202364-01		
2	-	1	1				Transport subassy, stereo (see Fig. 7-7 for bkdn)	202364-02		
3	1	-	-				Head bridge assy, mono, FT, 0.25" (see Fig. 7-13 for bkdn)	202365-01		
4	-	1	-				Head bridge assy, stereo, 2 trk, 0.25" (see Fig. 7-13 for bkdn)	202365-02		
5	-	-	1				Head bridge assy, stereo, 1/4 trk, 0.25" (see Fig. 7-13 for bkdn)	202365-03		
7*	(1)	(1)	(1)				Capstan servo instl kit, console (see servo supplement)	202283-03		
8*	(1)	(1)	(1)				Capstan servo instl kit, rack (see servo supplement)	202283-06		
9*	(1)	(1)	(1)				Capstan motor kit, 3.75 - 7.5 in/s, 60 Hz (see Fig. 7-20 in 280B manual for bkdn)	201739-01		
10*	(1)	(1)	(1)				Capstan motor kit, 7.5 - 15.0 in/s, 60 Hz (see Fig. 7-20 in 280B manual for bkdn)	201739-02		
11*	(1)	(1)	(1)				Capstan motor kit, 3.75 - 7.5 in/s, 50 Hz (see Fig. 7-20 in 280B manual for bkdn)	201739-03		
12*	(1)	(1)	(1)				Capstan motor kit, 7.5 - 15.0 in/s, 50 Hz (see Fig. 7-20 in 280B manual for bkdn)	201739-04		
13*	(1)	(1)	(1)				Amplifier PWA, 2 ch, audio, NAB (see Fig. 7-16 for bkdn)	201980-01		
14*	(1)	(1)	(1)				Amplifier PWA, 2 ch, audio	201980-02		
							*Select one			

Table 7-1. Parts List

FIG. & REF.	QUANTITY PER ASSEMBLY -01	-02	-03				DESCRIPTION	PART NO.	MFR. PART NO.	CODE IDENT. NO.
7-6							Transport assy (continued)	202366-		
15	1	1	1				Panel assy, front dress, mono	202358-01		
16	1	1	1				Panel assy, front dress, stereo	202358-02		
17	1	1	1				Standard head cover	502010001		
18	1	1	1				Tape break switch assy (see Fig. 7-18 in 280B manual for bkdn)	200547-01		
19	1	1	1				Bezel, capstan	201431-02		
20	1	1	1				Adhesive, pressure sensitive	201731-01		
21	1	1	1				Flywheel, machined	200290-01		
22	1	1	-				Pinch roller assy, 0.25 tape (see Fig. 7-21 in 280B manual for bkdn)	201543-01		
23	1	1	1				Reel stabilizer assy, 0.25 tape (see Fig. 7-14 for bkdn)	202567-01		
24	1	1	1				Tape break arm assy, 0.25 tape (see Fig. 7-23 in 280B manual for bkdn)	200709-01		
25	2	2	2				Reel knob assy	162439		
27	1	1	1				Label, audio adj	202369-01		
28	2	2	2				Hub, reel centering	162441		
33	2	2	2				Screw, pnh, 6-32 x 1/4	110174		
34	3	3	3				Screw, btnhd, 10-32 x 5/8	110129		
35	3	3	3				Screw, flh, 8-32 x 1/2	110212		
36	4	4	4				Screw, ovh, 6-32 x 3/4	110232		
37	1	1	1				Screw, pnh, 6-32 x 1/4	110174		
38	2	2	2				Screw, pnh, 6-32 x 5/8	110242		
39	2	2	2				Screw, pnh, 10-32 x 5/8	110167		
42	1	1	1				Setscrew, ovp, allen hd, 10-32 x 1/2	110162		
44	2	2	2				Lockwasher, int t, no. 6	111023		
46	2	2	2				Lockwasher, int t, no. 10	111025		
49	4	4	4				Knob, 11/16 x 13/32	162162	DC7N2B	23480

Table 7-1. Parts List

FIG. & REF.	QUANTITY PER ASSEMBLY -01	-02	-03				DESCRIPTION	PART NO.	MFR. PART NO.	CODE IDENT. NO.
7-6							Transport assy (continued)	202366-		
50	-	1	1				Knob, concentric (inner)	112445	PC1N1B	23480
51	-	1	1				Knob, concentric (outer)	112444	2N2BC	23480
52	1	-	-				Knob	162421	PC2M2B	23480
53	2	2	2				Cable tie mount, adhesive	162228	ABMS-AD	06383
54	8	8	8				Cable tie, nylon	162198	SSTIM-MP06383	06383
56	1	1	1				Dummy plug assy, inverter	202376		

TOP VIEW

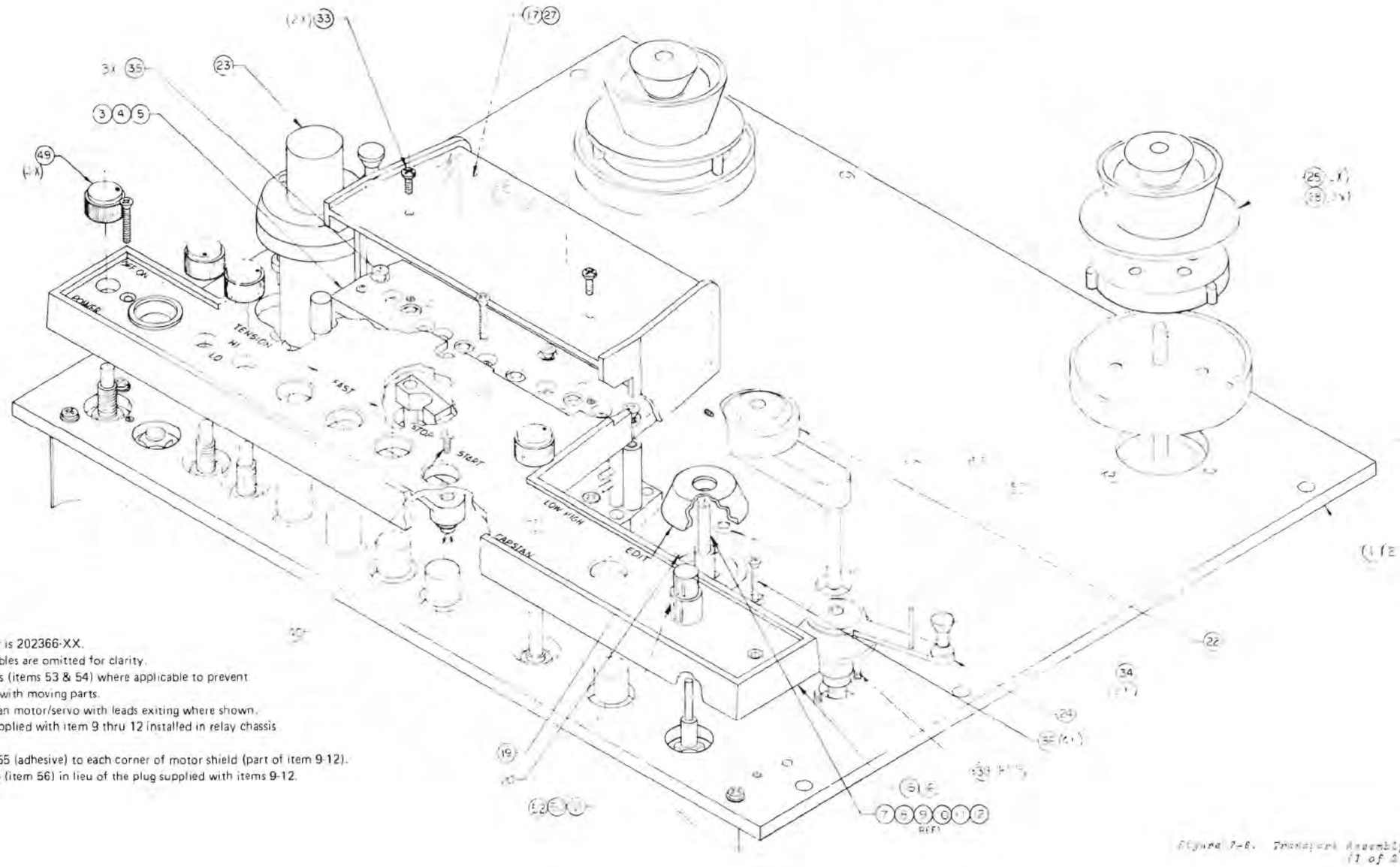

NOTES:

1. Assy number is 202366-XX.
2. Wires and cables are omitted for clarity.
3. Use cable ties (items 53 & 54) where applicable to prevent interference with moving parts.
4. Orient capstan motor/servo with leads exiting where shown. Capacitor supplied with item 9 thru 12 installed in relay chassis item 7 & 8.
6. Apply item 55 (adhesive) to each corner of motor shield (part of item 9-12).
7. Use this plug (item 56) in lieu of the plug supplied with items 9-12.

Figure 7-6. Transport Assembly (1 of 2)

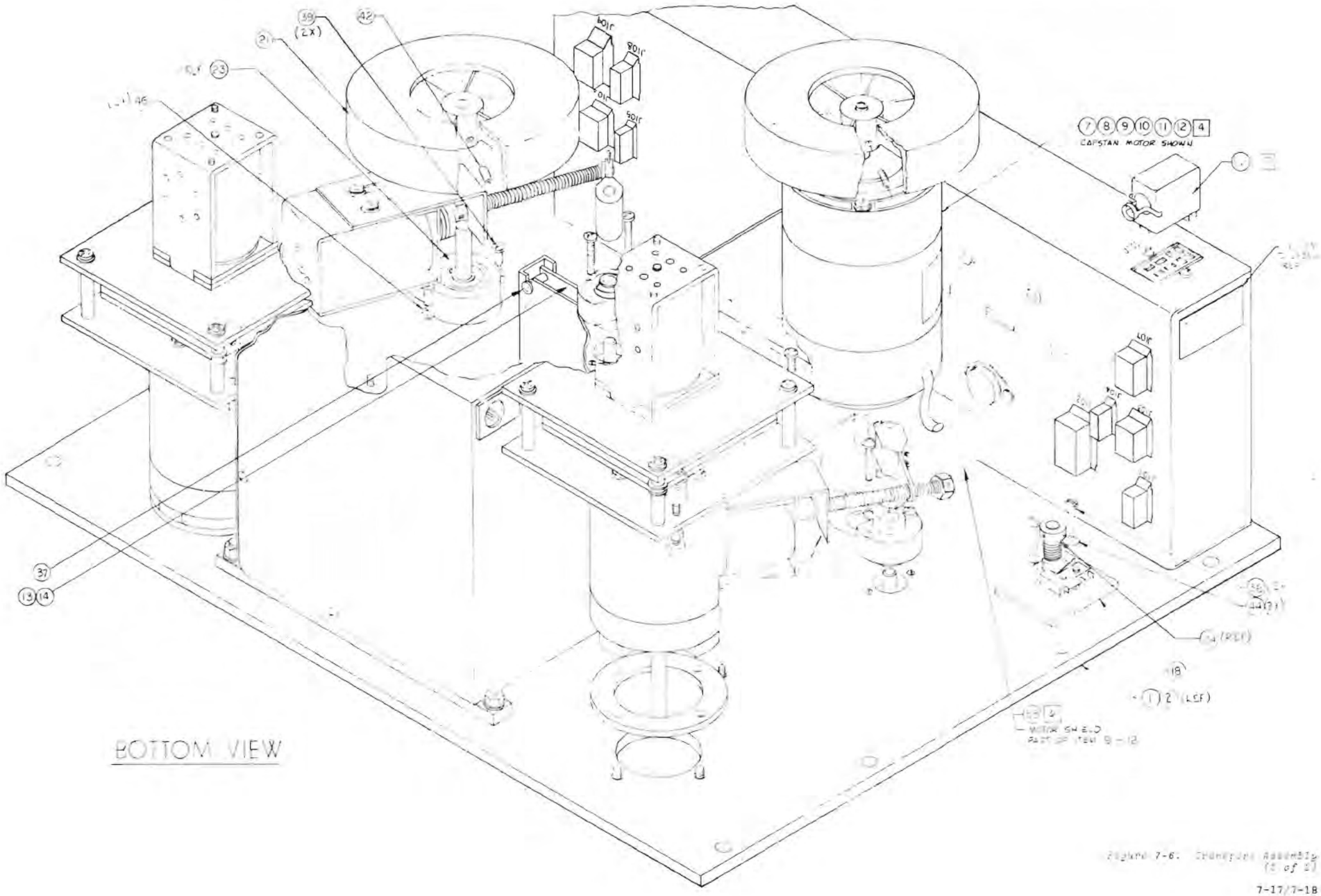

Figure 7-6. Chassis Assembly (1 of 2)

Table 7-1. Parts List

FIG. & REF.	QUANTITY PER ASSEMBLY -01	-02					DESCRIPTION	PART NO.	MFR. PART NO.	CODE IDENT. NO.
7-7	1	-					Transport subassy, mono (see Fig. 7-6 for NHA)	202364-01		
7-7	-	1					Transport subassy, stereo (see Fig. 7-6 for NHA)	202364-02		
1	1	1					Deck plate, std	200566-03		
2	2	2					Housing assy, pinch roller and ATL (parts not sold separately)	200562		
3	1	1					Pinch roller connecting rod assy (see Fig. 7-25 in 280B manual for bkdn)	200560-01		
4	1	1					ATL solenoid assy (see Fig. 7-26 in 280B manual for bkdn)	200553-01		
5	1	1					Power supply assy (see Fig. 7-17 for bkdn)	201977-01		
6	1	1					Torque motor & brake assy (supply) (see Fig. 7-28 in 280B manual for bkdn)	201693-01		
7	1	1					Torque motor & brake assy (takeup) (see Fig. 7-29 in 280B manual for bkdn)	201713-01		
8	1	1					ATL linkage assy (see Fig. 7-30 in 280B manual for bkdn)	502010400-11		
9	1	1					Head platform base plate assy	502010400-51		
	1	1					. Head, base plate	508010402-01		
	3	3					. Standoff, head bridge	502010202		
	3	3					. Setscrew, ovp, 8-32 x 1/2	110103		
10	1	1					Arm assy, pinch roller	201546-01		
	1	1					. Arm, pinch roller	201545-01		
	1	1					. Shaft, act, arm pinch roller	502050400-04		
	1	1					. Setscrew, ovp, 8-32 x 3/16	110109		
11	2	2					Reel, platform assy (see Fig. 7-31 in 280B manual for bkdn)	502060600		
12	1	1					Shield, sub head	200601-01		

Table 7-1. Parts List

FIG. & REF.	QUANTITY PER ASSEMBLY -01	-02					DESCRIPTION	PART NO.	MFR. PART NO.	CODE IDENT. NO.
7-7							Transport subassy (continued)	202364-		
17	8	8					Screw, btnhd, 10-32 x 3/4	110130		
18	4	4					Screw, btnhd, 8-32 x 3/8	110211		
19	3	3					Screw, flh, 8-32 x 1/2	110212		
20	9	9					Lockwasher, int t, #6	111023		
21	8	8					Nut, hex, 10-32 x 5/16, UNF	111123		
22	8	8					Lockwasher, int t, #10	111025		
23	1	1					Spacer, brass, 1/4 od, 6-32 x 0.375	112058	2121	83330
13	2	2					Torque spacer	502060002		
24	4	4					Screw, pnh, 6-32 x 3/4	110180		
25	1	1					Washer, flat, nylon	111131	NW25-6874	95987
26	4	4					Screw, btnhd, 10-32 x 1.00	110132		
27	5	5					Screw, pnh, 6-32 x 1/2	110175		
28	2	2					Screw, pnh, 8-32 x 5/8	110083		
14	1	-					Transport control chassis assy (see Fig. 7-8 for bkdn)	202351-01		
15	-	1					Transport control chassis assy (see Fig. 7-8 for bkdn)	202351-02		
16	1	1					Play electronics assy (see Fig. 7-15 for bkdn)	201985-01		

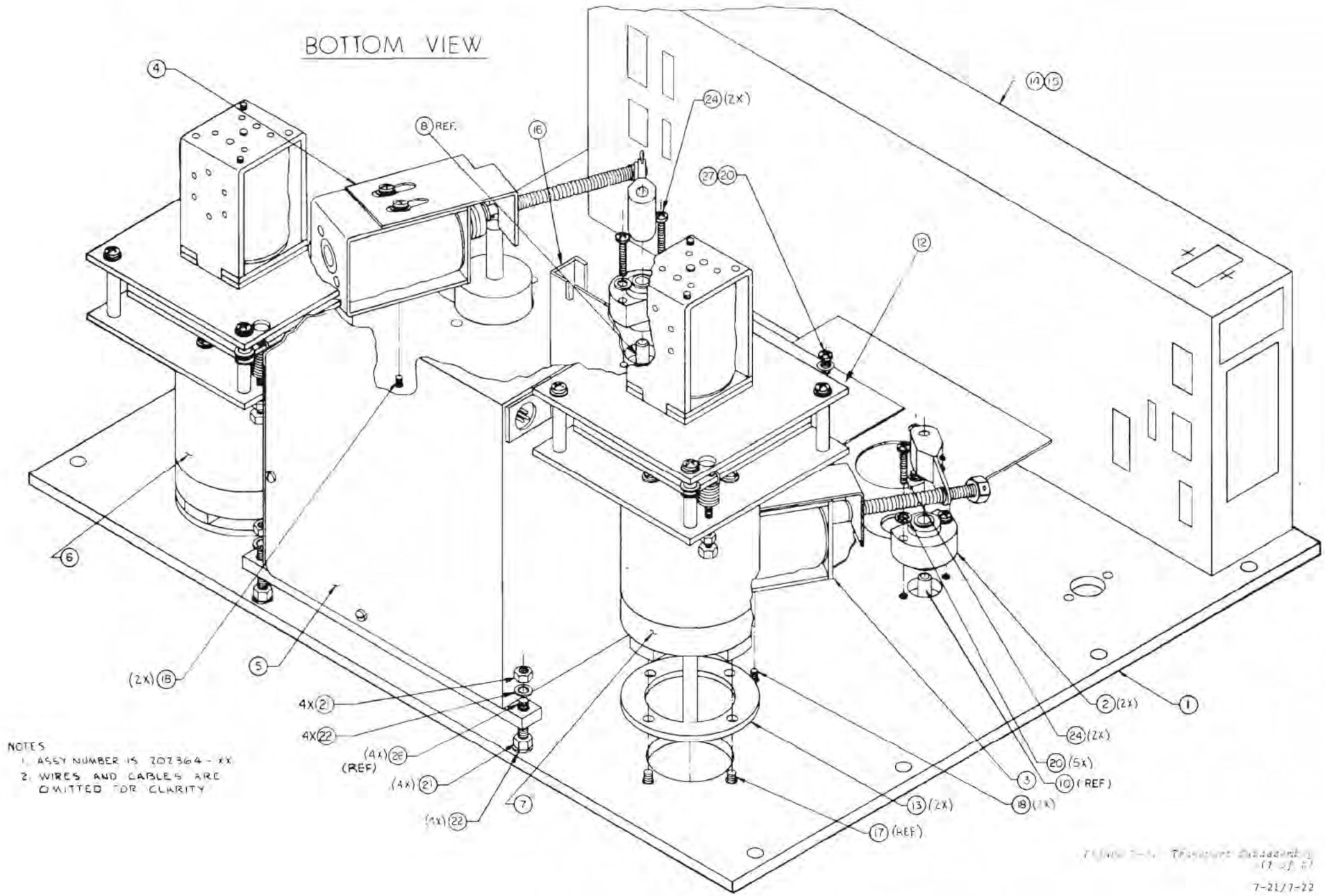

NOTES
1. ASSY NUMBER IS 202364 - XX
2. WIRES AND CABLES ARE OMITTED FOR CLARITY

Figure 7-1. Transport Subassembly (2 of 2)

TOP VIEW

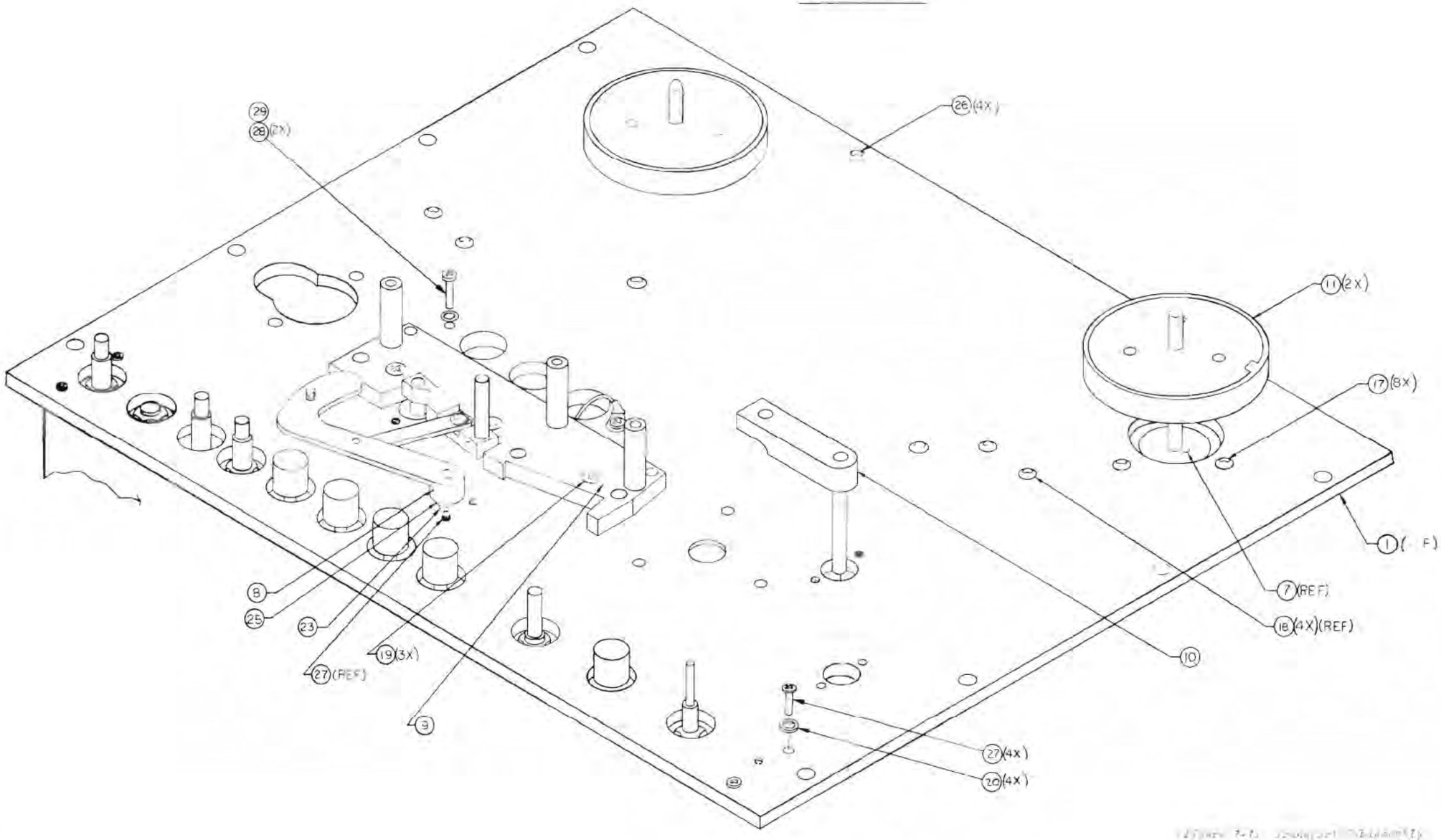

Figure 7-1. Assembly (1 of 8)

Table 7-1. Parts List

FIG. & REF.	QUANTITY PER ASSEMBLY -01	-02					DESCRIPTION	PART NO.	MFR. PART NO.	CODE IDENT. NO.
7-8	1	-					Transport control chassis assy, 60 Hz, mono (see Fig. 7-7 for NHA)	202351-01		
	-	1					Transport control chassis assy, 60 Hz, stereo (see Fig. 7-7 for NHA)	202351-02		
1	1	1					Control logic chassis	202335-01		
2	1	1					Transport logic PWA (see Fig. 7-32 in 280B manual for bkdn)	201600-01		
3	1	1					Spacer	202377-01		
4	1	1					Bracket, cap	200461-01		
5	1	1					Cover, relay control chassis	200869-01		
6	1	1					Harness assy, xport cont logic (see Fig. 7-9 for bkdn)	202350-01		
7	1	1					Lockwasher, int t, 3/8	111027		
8	5	5					Lockwasher, int t, #6	111023		
9	-	1					Harness assy, audio stereo (see Fig. 7-12 for bkdn)	201979-02		
10	1	-					Harness assy, audio mono (see Fig. 7-12 for bkdn)	201979-01		
11	2	2					Washer, flat, #6	111003		
12	5	5					Nut, kep, ext lockwasher, 6-32 x 5/16	111063		
13	2	2					Cable tie mount, adhesive back	162228	ABMS-AD	06383
14	17	17					Screw, pnh, 6-32 x 1/4	110174		
15	5	5					Spacer, 6-32 unc x 0.75	112055		
16	2	2					Screw, pnh, 6-32 x 0.50	110175		
17	2	2					Screw, pnh, 6-32 x 1-7/8	110201		
18 U101	1	1					IC, linear voltage ampl	154001	LM309K	12040
20 C101, C102	2	2					Cap, 4 µF, 370 Vac	151016	45F272	03508
19 J131	1	1					Conn, skt block, 26-pin	160208	200512-2	00779
21 Ref J131	1	1					Skt guide, center female	160212	200390-4	00779
23 Ref J131	1	1					Pin, guide center, male	160213	200389-4	00779

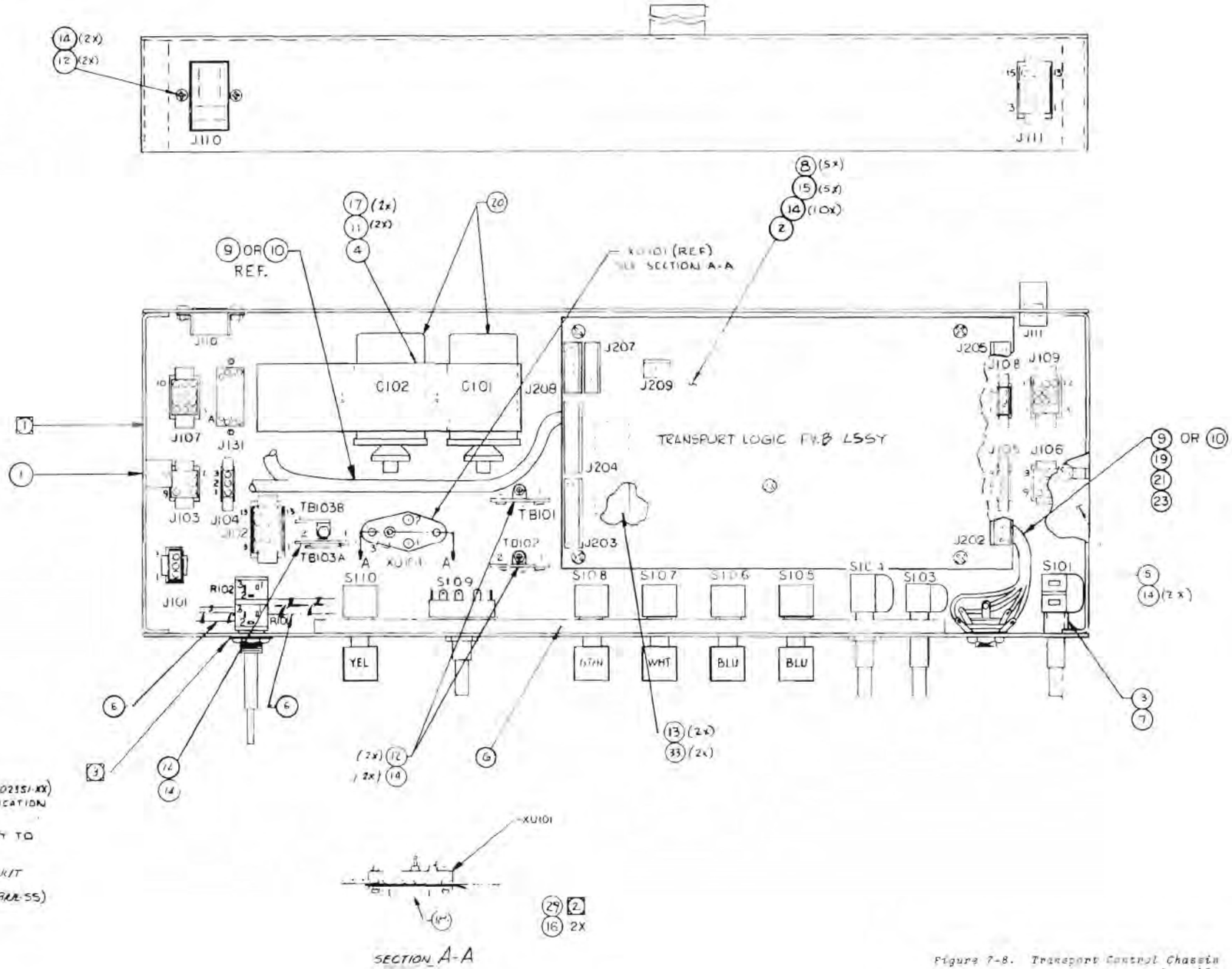

NOTES

1. IDENTIFY ASSEMBLY NUMBER (202351-XX) BY INK STAMP IN APPROX LOCATION SHOWN.
2. APPLY ITEM 29 LIBERALLY TO ITEM 18.
3. INSTALL LOCKWASHER AND NUT ON OUTSIDE OF CHASSIS. (PARTS SUPPLIED WITH HARNESS)

Figure 7-8. Transport Control Chassis Assembly

Table 7-1. Parts List

FIG. & REF.	QUANTITY PER ASSEMBLY -01						DESCRIPTION	PART NO.	MFR. PART NO.	CODE IDENT. NO.
7-9	1						Transport control panel harness assy (see Fig. 7-8 for NHA)	202350-01		
1	1						Motor speed and equalization sw assy	200672-01		
S109	1						. Sw, rotary, modified	200861-01		
	4						. Cap, cer disc, 0.05 μF ±20%, 500V	163006	5GA-S50	56289
	2						. Res, carb, 10Ω ±5%, 1/2W	150307		
2	1						Plate, sw, control chassis	202331-01		
3 S105-S108, S110	5						Sw, pushbutton	162183	01-748510	04426
4 S101, S104	2						Sw, rotary	162151	1575-VA	04009
5 S103	1						Sw, rotary	162133	1565-XC	04009
7 Ref S105, S106	2						Pushbutton, blu	162185	01-931313	04426
8 Ref S108	1						Pushbutton, grn	162186	01-931314	04426
9 Ref S107	1						Pushbutton, wht	162187	01-931311	04426
10 Ref S110	1						Pushbutton, yel	162188	01-931315	04426
11 Ref S105-S108, S110	5						Lamp bulb, indicator	162157	335	71744
12	5						Lockwasher, int t, 9/16	111028		
13	5						Nut, panel, 15/32-32	111139		
6 J110	1						Conn, female, 8-pin skt	160052	S3308-AB	13150

Table 7-1. Parts List

FIG. & REF.	QUANTITY PER ASSEMBLY -01						DESCRIPTION	PART NO.	MFR. PART NO.	CODE IDENT. NO.
7-9							Transport control panel harness assy (continued)	202350-01		
14 TB-102, TB-101, TB-103A	3						Term strip, solder, 2-pt	162222	863	83330
15 TB-103B	1						Term strip, solder, 1-pt	162087	51-B	71785
16 XU-101	1						Socket, xstr, raised boss	152064	8080-1G3	91506
23	3						Lockwasher, int t, 3/8	111027		
19	1						Harness assy, xport control logic (see Fig. 7-11 for bkdn)	202345-01		
20	1						Harness assy, xport control Power (see Fig. 7-10 for bkdn)	202344-01		

NOTES: UNLESS OTHERWISE SPECIFIED:

1. IDENTIFY ASSY NUMBER 202350-01 BY TAG.
2. CUT OFF SWITCH ARM TERMINAL NO. 12. ORIENT SWITCH (S109) IN POSITION SHOWN.
3. NUT (SUPPLIED WITH SWITCH) TO REMAIN ON THIS SIDE OF PANEL (AS SHOWN).
4. MODIFY ITEM 14 (TERMINAL STRIP, 2 POINT) BY WEAVING ITEM 11 (WIRE, SOLID, 20 AWG) THRU RIVET HOLES OF ITEM 14 AND SOLDER (3X) AS SHOWN IN DETAIL A, REF TB103A. TB103B, ITEM 15 (TERMINAL STRIP, 1 POINT) TO BE MODIFIED BY SOLDERING ITEM 17 (WIRE, SOLID, 20 AWG), 50 LG THRU RIVET HOLES OF ITEM 15, SIMILAR TO TB103A.
5. APPLY ITEM 21 TO 50% ALL TERMINALS.

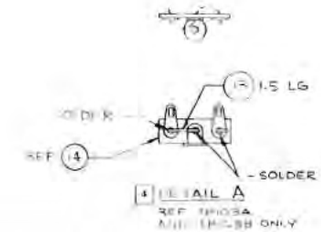

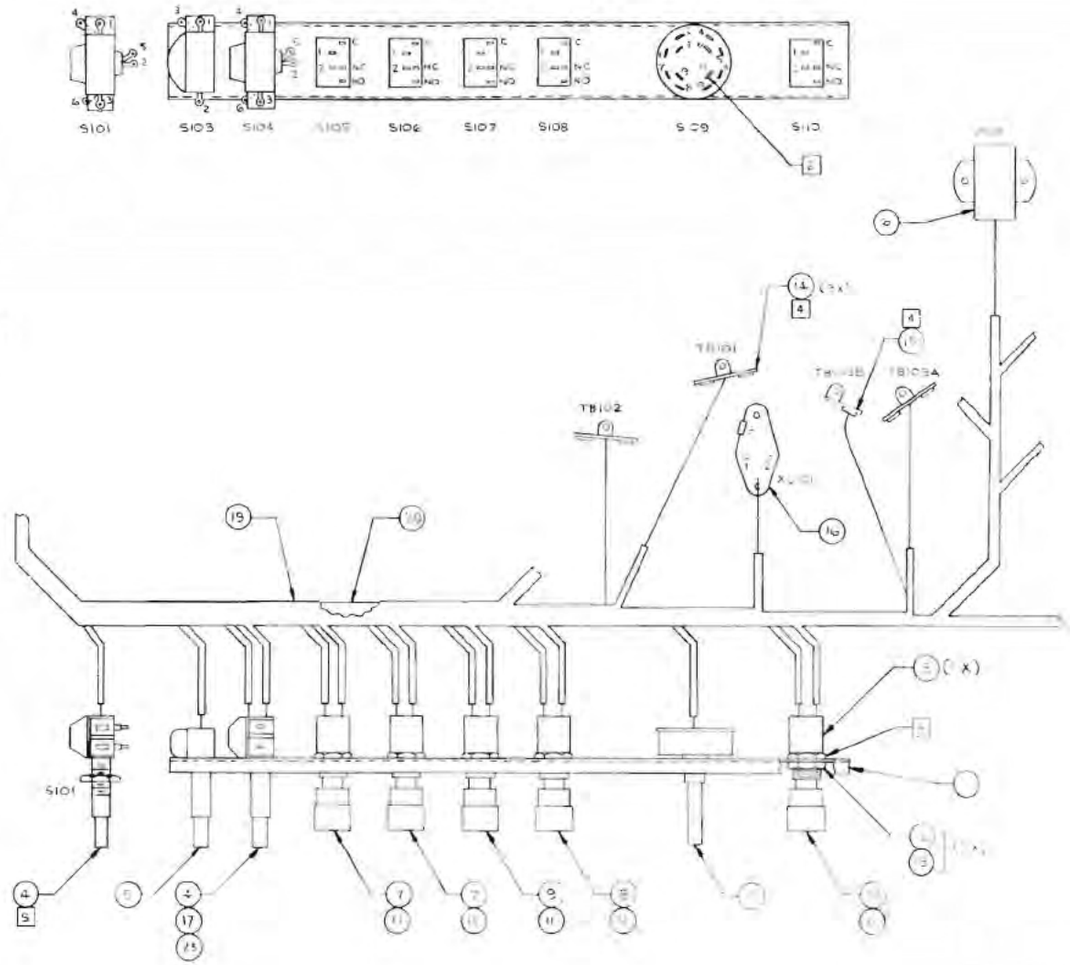

Figure 7-3. Instrument Control Panel Harness Assembly

Table 7-1. Parts List

FIG. & REF.	QUANTITY PER ASSEMBLY -01						DESCRIPTION	PART NO.	MFR. PART NO.	CODE IDENT. NO.
7-10	1						Harness assy, xport cont power (see Fig. 7-9 for NHA)	202344-01		
1 P203, P204	2						Conn, sq wire, 8 holes	160023	2139-8-2	27264
2 J104, J105	2						Conn, rcpt, 3 holes	160045	1625-3R1	27264
3 J103, J106	2						Conn, rcpt, 9 holes	160004	1625-9R	27264
4 J107, J109	2						Conn, rcpt, 12 holes	160049	1625-12R1	27264
5 J102	1						Conn, plug, 15 holes	160040	1625-15P	27264
7 P203, P204	15						Term, sq wire, crimp style,	160000	2378-T	27264
8 J102	15						Term pin, 0.062 dia, male,	160030	1854	27264
9 Ref C101-C103	8						Term, qdisc, 0.250, 22-18 ga	160016	AA-1140	98410
10 J103, J104, J106, J107, J109	30						Term, pin, 0.062 dia, female, 22 ga	160031	1855	27264
11 RV-101, RV-102	2						Varistor, symmetrical	153022	VP130-A10	03508

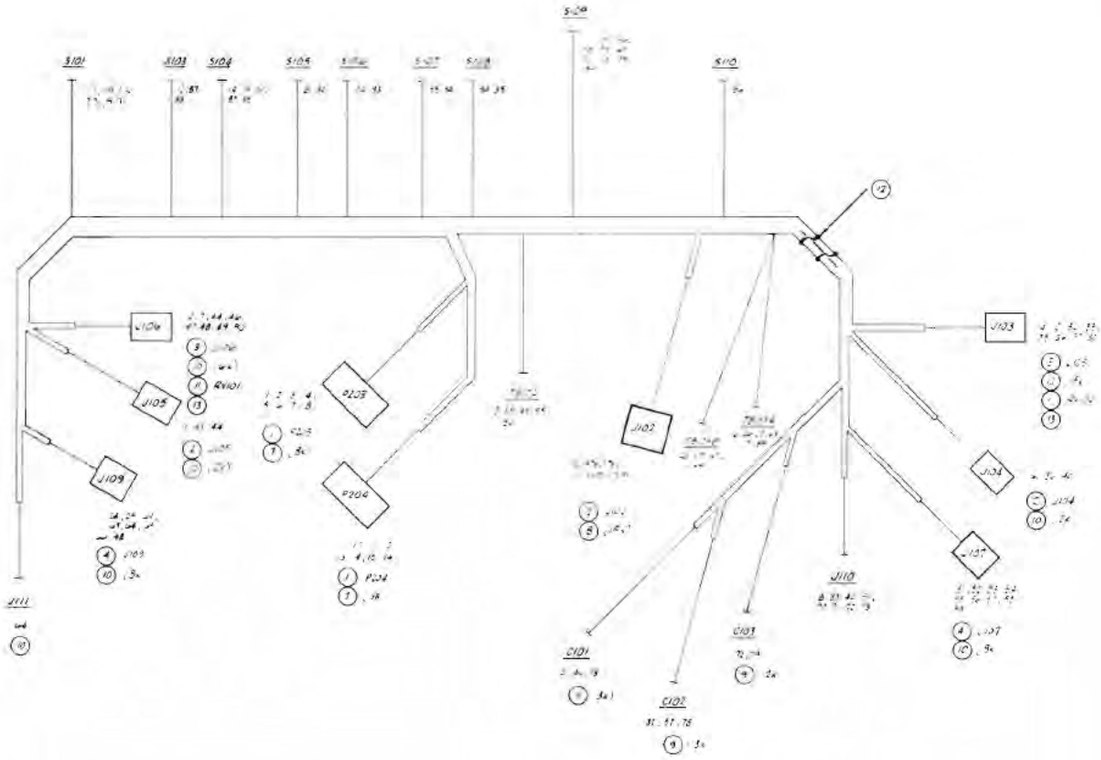

NOTES:

1. ASSEMBLY NUMBER IS: 202344 (01)
2. MARK REFERENCE DESIGNATIONS ON CONNECTORS.
3. WIRE NUMBERS NOT USED: 30, 31, 34, 38, 39, 41, 42, 46, 50, 53, 57, 58, 59, 70, 75 & 77, 76.

202344A

Figure 7-10. Harness Assembly, Transport Control Power

Table 7-1. Parts List

FIG. & REF.	QUANTITY PER ASSEMBLY -01						DESCRIPTION	PART NO.	MFR. PART NO.	CODE IDENT. NO.
7-11	1						Harness assy, xport control logic (see Fig. 7-9 for NHA)	202345-01		
1 P207, P208	2						Conn, sq wire, 6 holes	160022	2139-6-2	27264
2 P202, P205	2						Conn, sq wire, 12 holes	160024	2139-12-2	27264
3 J101, J108	2						Conn, plug, 3 holes	160035	1625-3P	27264
5 J111	1						Conn, rcpt, 15 holes	160050	1625-15R1	27264
6 Ref P202, P205, P207, P208	32						Term, sq wire, crimp style,	160000	2378-T	27264
7 Ref J101, J108	5						Term, pin, 0.062 dia, male, 22 ga	160030	1854	27264
8 Ref J109, J111	13						Term, pin, 0.062 dia, female	160031	1855	27264

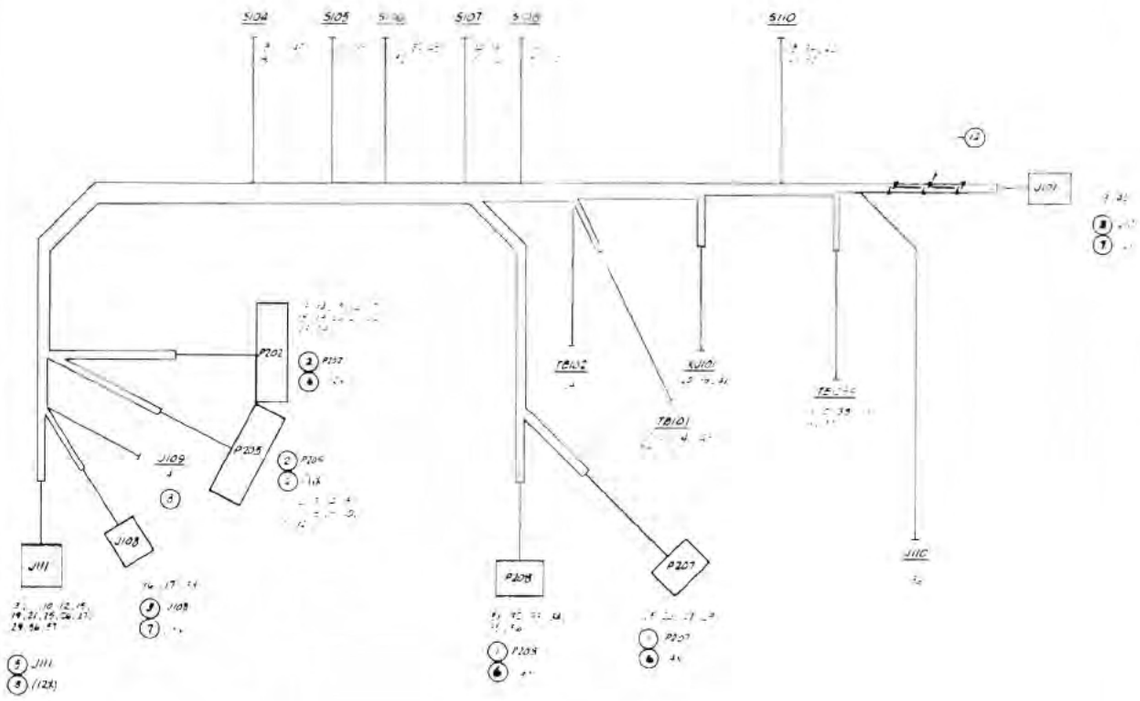

NOTES

1. ASSEMBLY NUMBER IS - 202345-01
2. MARK REFERENCE DESIGNATIONS ON CONNECTORS.
3. WIRE NUMBERS NOT USED: 6, 7, 18, 30, 37, 40, 44, 47, 49, 51, 53

202345A

Figure 7-11. Harness Assembly, Transport Control Logic

Table 7-1. Parts List

FIG. & REF.	QUANTITY PER ASSEMBLY -01	-02					DESCRIPTION	PART NO.	MFR. PART NO.	CODE IDENT. NO.
7-12	1	-					Harness assy, audio control, mono (see Fig. 7-8 for NHA)	201979-01		
	-	1					Harness assy, audio control, stereo (see Fig. 7-8 for NHA)	201979-02		
Ref J131	12	24					Skt, contact, female	160210	66105-4	00779
J133	-	1					Jack, phono, stereo, 3-cond	162396	14B	82389
R101/ R102	-	1					Res, var, concentric, 10kΩ/10kΩ	156098	LM-2198	71450
Ref R101/ R102	1	1					Solder lug, 3/8 dia hole	162159		
J133	1	-					Jack, phono, mono, 3-cond	162042	L12A	82389
R101	1	-					Res, var, 1kΩ, audio taper	156115	70AIN132P-103R	01121

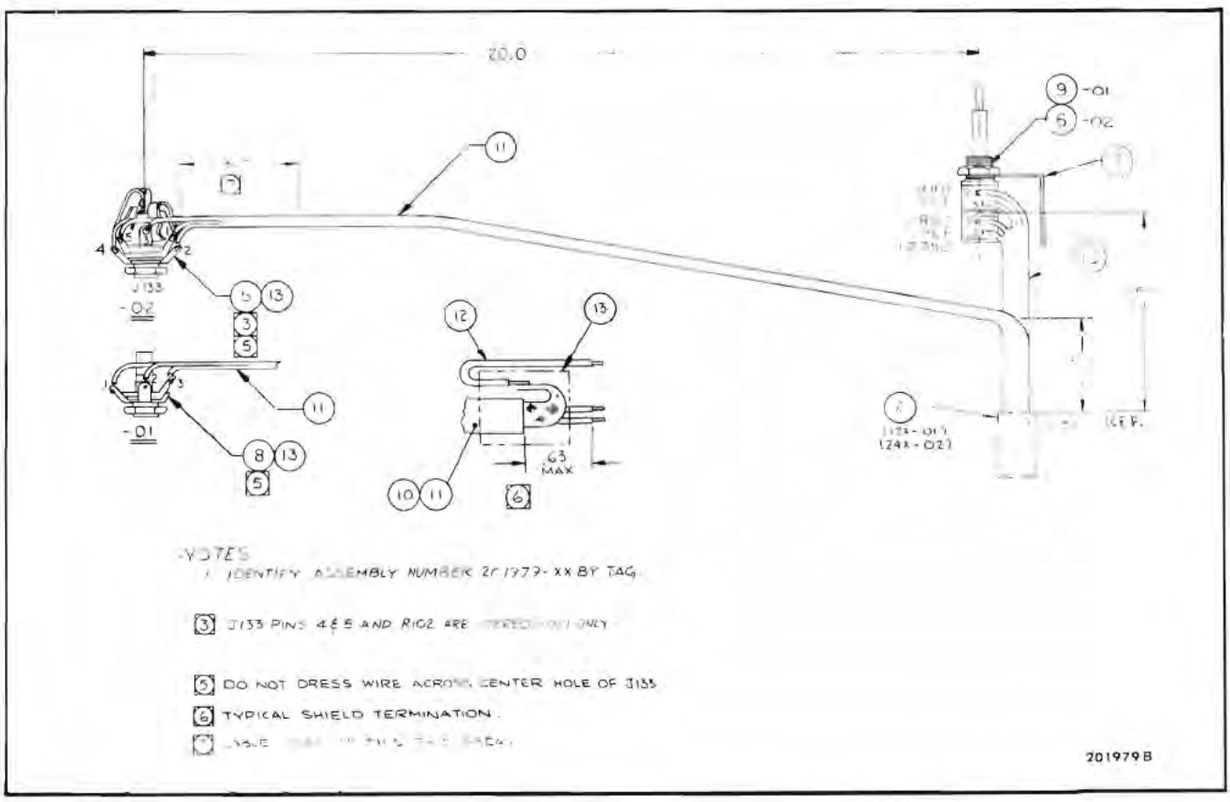

Figure 7-12. Harness Assembly, Audio Control

Table 7-1. Parts List

FIG. & REF.	QUANTITY PER ASSEMBLY -01	-02	-03				DESCRIPTION	PART NO.	MFR. PART NO.	CODE IDENT. NO.
7-13	1	-	-				Head bridge assy, mono, FT, 0.25 (see Fig. 7-6 for NHA)	202365-01		
	-	1	-				Head bridge assy, stereo, 2 trk, 0.25 (see Fig. 7-6 for NHA)	202365-02		
	-	-	1				Head bridge assy, stereo, 1/4 trk, 0.25 (see Fig. 7-6 for NHA)	202365-03		
1	1	1	1				Head bridge mtg platform	200784-01		
2	3	3	3				Tape guide post assy, 0.25 (parts not sold separately)	502010102-01		
3	1	1	1				Scrape filter assy, 0.25 (see Fig. 7-20 for bkdn)	201929-01		
4	2	2	2				Dummy hd stack assy	202341-01		
	2	2	2				. Dummy hd assy	202343-01		
	2	2	2				. Hd mtg block	200581-01		
	4	4	4				. Setscrew, ovp, 6-32 x 1/4	110110		
	4	4	4				. Screw, pnh, 6-32 x 3/4	110074		
5	1	-	-				PB hd stack assy, FT, 0.25 (see Fig. 7-18 for bkdn)	202348-01		
6	-	1	-				PB hd stack assy, 2 trk, 0.25 (see Fig. 7-39 in 280B manual for bkdn)	200579-02		
7	-	-	1				PB hd stack assy, stereo, 1/4 trk, 0.25 (see Fig. 7-39 in 280B manual for bkdn)	200579-03		
9	4	4	4				Screw, btnhd, 10-32 x 0.38	110102		
10	3	3	3				Setscrew, ovp, 6-32 x 1/8	110136		
12	1	1	1				Shield, PB hd	200474-01		
13	A/R	A/R	A/R				Loctite	162233	404	05972

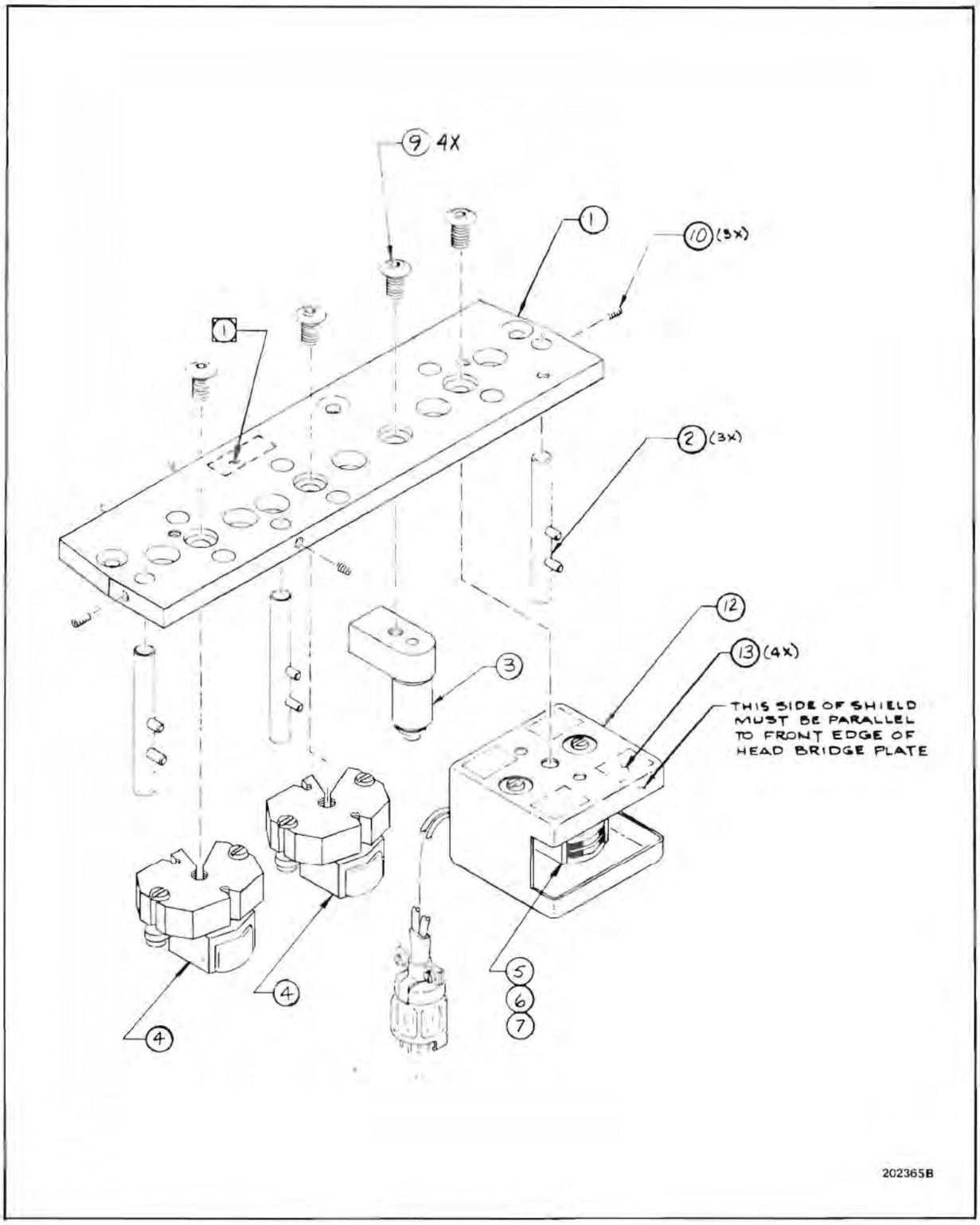

Figure 7-13. Head Bridge Assembly

Table 7-1. Parts List

FIG. & REF.	QUANTITY PER ASSEMBLY -01						DESCRIPTION	PART NO.	MFR. PART NO.	CODE IDENT. NO.
7-14	1						Reel stab assy, 0.25 tape (see Fig. 7-6 for NHA)	202567-01		
1	1						Stab housing, machined	200546-02		
2	1						Shaft and pulley assy (parts not sold separately)	502030200		
3	1						Shaft, tension arm	501030303		
4	1						Spring adj collar	501030103-02		
5	1						Spring, torsion	502030102		
7	1						Tape tension arm	502030301-04		
8	1						Base section, tape guide	501030302-01		
9	1						Top section, tape guide	501030302-02		
10	1						Spacer, tape guide, 0.25	501030302-03		
12	1						Grip ring	112106	5555-25	79136
13	1						Grip ring	112127	5555-31	79136
14	2						Retaining ring	112128	N5000-102	79136
15	2						Bearing, ball	112006	77039M3BT2	29337
16	1						Washer, spring, 0.350 id x 0.492 od	111029	W0492-007-S	70472
17	2						Washer, thrust, 0.260 id x 0.375 od	111019	97015	73734
18	1						Screw, flh, 4-40 x 5/8	110013		
20	1						Screw, ovh, 6-32 x 0.44	110189		
21	1						Setscrew, cup pt, 4-40 x 1/8	110112		
22	A/R						Lubricating oil, capella B only	152243		
24	A/R						Loctite, thd, adhesive sealer	112410	222	05972

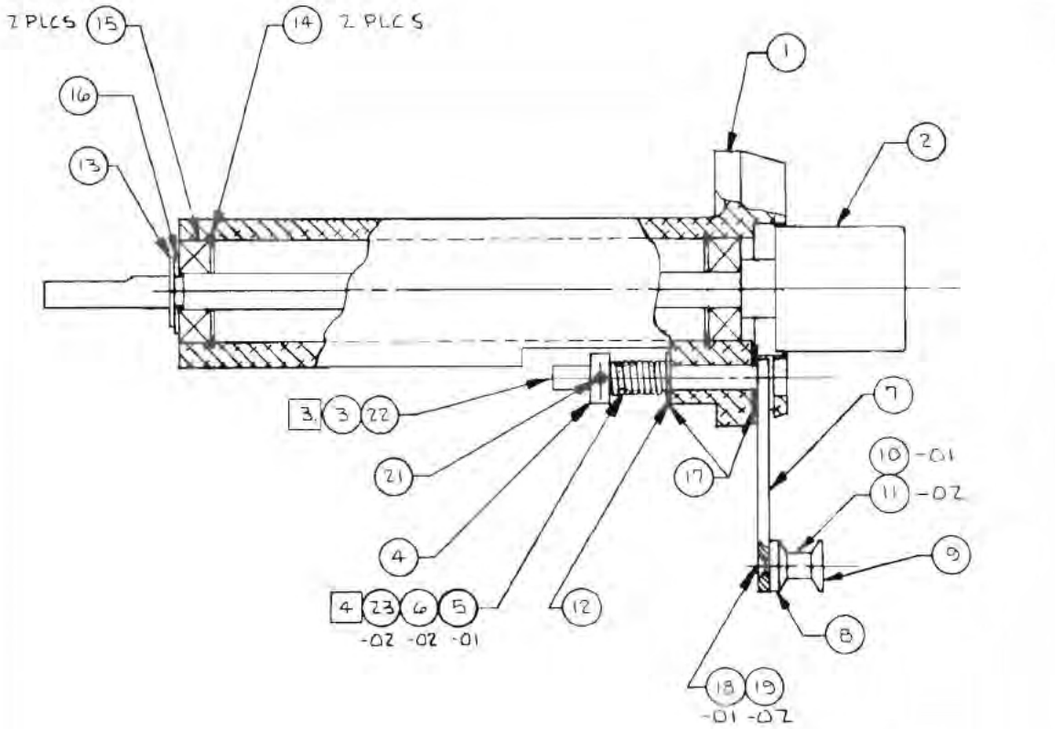

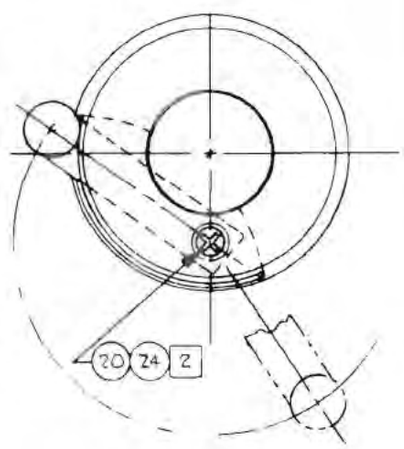

NOTES:

1. IDENTIFY ASSY NO. 202567-XX.
2. SECURE ITEM 20 WITH ITEM 24.
3. APPLY ITEM 22 BETWEEN (HOUSING) ITEM 1 AND (SHAFT) ITEM 3.
4. INSTALL ROLL PIN (ITEM 23) INTO HOUSING (ITEM 1) TO RETAIN STABILIZER SPRING (ITEM 6) ON -02 VERSION ONLY, ROLL PIN SHOULD PROTRUDE .30 ± .07 IN.

202567B

Figure 7-11. Reel Stabilizer Assembly, 0.25 Tape

Table 7-1. Parts List

FIG. & REF.	QUANTITY PER ASSEMBLY -01						DESCRIPTION	PART NO.	MFR. PART NO.	CODE IDENT. NO.
7-15	1						Play electronics assy (see Fig. 7-7 for NHA)	201985-01		
1	1						Card cage	201976-01		
2	1						Cover, card cage	202338-01		
3	1						Harness assy, audio intcon (see Fig. 7-19 for bkdn)	201987-01		
4	1						Bushing, OPEN/CLOSED	112498	OCB-875	28520
5	2						Guide, PWB	162155	RAD4125	07556
6	4						Screw, pnh, 4-40 x 1/4	110060		
7	2						Screw, pnh, 4-40 x 1/2	110062		
8	4						Washer, flat, #4	111002		
9	2						Nut, kep, ext lockwasher, 4-40	111062		
10	4						Lockwasher, int t, #4	111022		

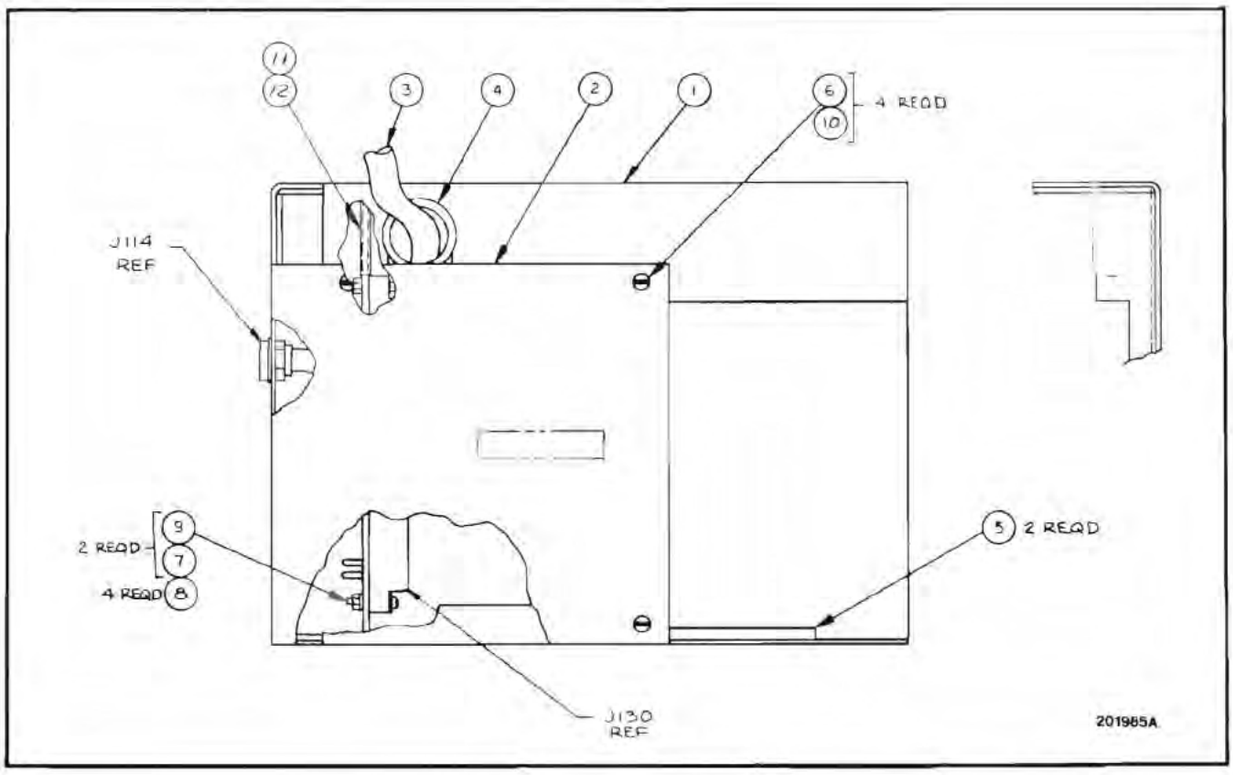

Figure 7-15. Play Electronics Assembly

Table 7-7. Parts List

FIG. & REF.	QUANTITY PER ASSEMBLY -01						DESCRIPTION	PART NO.	MFR. PART NO.	CODE IDENT. NO.
7-16	1						Amplifier PWA, 2-channel, audio (see Fig. 7-6 for NHA)	201980-01		
R19, R20	2						Res, carb, 5.6Ω ±5%, 1/4W	149148		
R21 R22	2						Res, carb, 330Ω ±5%, 1/4W	149095		
R33, R34, R48, R49	4						Res, carb, 470Ω ±5%, 1/4W	149010		
R27, R28, R37, R38, R46, R47	6						Res, carb, 2 kΩ ±5%, 1/4W	149096		
R31, R32, R44, R45	4						Res, carb, 2.2 kΩ ±5%, 1/4W	149098		
R17, R18	2						Res, carb, 3.3 kΩ ±5%, 1/4W	149091		
R41, R43	2						Res, carb, 8.2 kΩ ±5%, 1/4W	149074		
R29, R30	2						Res, carb, 22 kΩ ±5%, 1/4W	149013		
R15, R16	2						Res, carb, 47 kΩ ±5%, 1/4W	149012		
R39, R40	2						Res, carb, 56 kΩ ±5%, 1/4W	149048		
R42	1						Res, carb, 100 kΩ ±5%, 1/4W	149073		
R5, R6, R11, R12	4						Res, carb, 330 kΩ ±5%, 1/4W	149067		
R25, R26, R35, R36	4						Res, carb, 1 MΩ ±5%, 1/4W	149087		
R3, R4	2						Res, metal oxide, 68.1Ω ±1%, 1/8W	149238		
R13, R14	2						Res, metal oxide, 100 kΩ ±1%, 1/8W	149240		

Table 7-1. Parts List

FIG. & REF.	QUANTITY PER ASSEMBLY -01						DESCRIPTION	PART NO.	MFR. PART NO.	CODE IDENT. NO.
7-16							Amplifier PWA, 2-channel audio (continued)	201980-01		
R1, R2	2						Res, metal oxide, 39.2 kΩ ±1%, 1/8W	149239		
R7-R10, R23, R24	6						Res, var, 20 kΩ	156036	3359W-203	80294
Q1-Q4	4						Xstr	152012	2N5089	04713
Q5	1						Xstr, general purpose	152050	2N4401	
U1	1						IC, linear	154024	LF13331-N	27014
U2	1						IC, linear	154020	LM378N	27014
U3	1						IC, linear	154019	LM379M	27014
T1, T2	2						Xfmr, 600Ω line	157006	S-81-X	81095
TP1-TP3	3						Test point	162203	7030B-7	88245
C1, C2	2						Cap, cer, mono, 470 pF, 50V	163090	UR15155050-471K	80031
C5, C6, C9, C10	4						Cap, cer, mono, 0.001 μF, 50V	163087	1C067102X-9500C4	56289
C17, C18, C25, C26	4						Cap, ceramic mono, 0.033 μF, 50V	163085	2C067333X-9500	56289
C7, C8	2						Cap, poly film, 0.01 μF ±10%, 80V	167028	192P1039R8	56289
C19, C20	2						Cap, Ta, 4.7 μF ±20%, 35V	171009	196D475X00-35JA1	56289
C31, C32, C34, C35	4						Cap, cer, mono, 0.1 μF ±15% max, 50V	163083	2C067104X	56289
C15, C16	2						Cap, Ta, 1.0 μF ±20%, 35V	171003	GB1X0G200	71468
C3, C4, C11, C12, C36, C37, C27, C28	8						Cap, Ta, 10 μF ±20%, 35V	171013	GB010G200	71468

Table 7-1. Parts List

FIG. & REF.	QUANTITY PER ASSEMBLY -01						DESCRIPTION	PART NO.	MFR. PART NO.	CODE IDENT. NO.
7-16							Amplifier PWA, 2-channel, audio (continued)	201980-01		
C21, C22	2						Cap, elctlt, 47 µF, 25V	164009	ET470X025A4	80031
C13, C14	2						Cap, Ta, 150 µF ±10%, 6.3V	171035	196D157X-9006LA3	56289
C23, C24	2						Cap, elctlt, 220 µF, 16V	164048	ET221X016A6	
C29, C30	2						Cap, elctlt, 1000 µF, 25V	164072	1000/25/8218	25088
C33	1						Cap, elctlt, 2200 µF, 40V	164073	2200/401/8208	
55 Ref T1, T2	2						Spacer, insulator	202333-01		
53	2						Washer, ext t, #4	111032		
54	2						Screw, pnh, 4-40 x 3/8	110172		
56 Ref U3	1						Heat sink, PCB mount	162397	641	90372
57 Ref U3	4						Spacer, #6 x 3/16 long x 3/8 od	112446	8734	83330
58	5						Screw, pnh, 6-32 x 1/2	110175		
59	8						Washer, flat, #6	111003		
60	7						Nut, kep, 6-32 x 5/16	111063		
61	1						Spacer, phenolic, 6-32 x 1/2 long x 1/4 od	112500		
62 Ref U3	.01 oz						Compound, silicone, heat sink	162180	340	71984
63	4						Screw, pnh, 6-32 x 3/8	110170		
64	1						Card pull, snap-in type	162339	Series 6201	31514

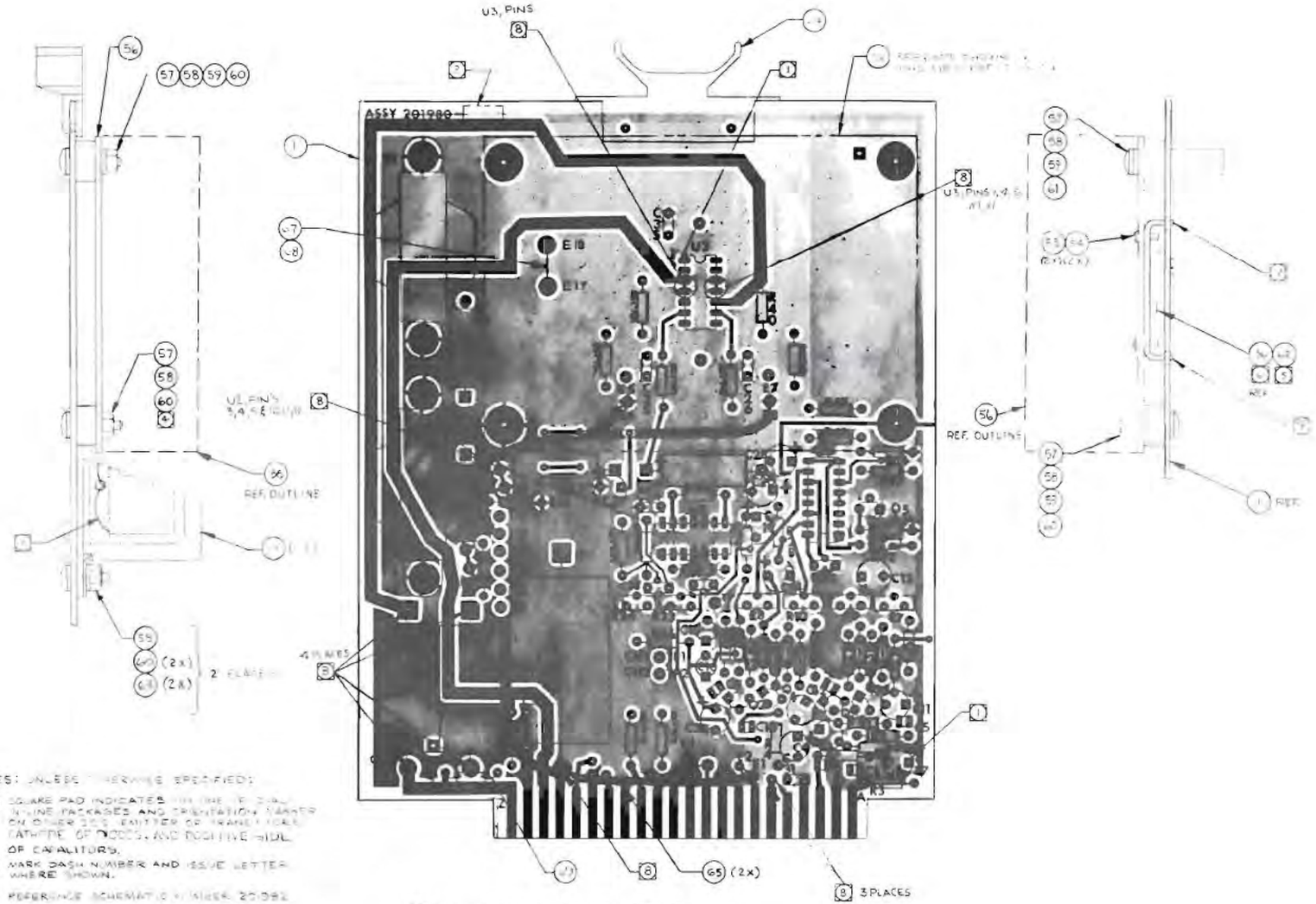

NOTES: UNLESS OTHERWISE SPECIFIED:

1. SQUARE PAD INDICATES PIN ONE OF DIAL IN-LINE PACKAGES AND ORIENTATION MARKER ON OTHER ICS. EMITTER OF TRANSISTORS, CATHODE OF DIODES, AND POSITIVE SIDE OF CAPACITORS.
2. MARK DASH NUMBER AND ISSUE LETTER WHERE SHOWN.
3. REFERENCE SCHEMATIC NUMBER 201982.
4. NO FLAT WASHER THIS CORNER TO INSURE PROPER ELECTRICAL CONNECTION.
5. APPLY ITEM 62 LIBERALLY TO ITEM 36.
6. THE HEATSINK MOUNTING SURFACE OF ITEM 36 MUST BE PARALLEL TO AND LOCATED 1/16 ABOVE THE PCB SO THAT BUCKLING OF THE PCB WILL NOT OCCUR WHEN THE HEATSINK IS SCREWED TIGHT TO BOTH THE PCB AND ITEM 36.
7. OUTSIDE WIRES SHALL BE ROUTED THRU LOWER HOLE IN TRANSFORMER AND SHALL BE DRESSED AS FAR AS POSSIBLE FROM EDGE OF PCB. WIRES SHALL NOT BE PULLED TAUT.
8. TOP SOLDERING OF THESE PLACES IS MANDATORY FOR PROPER ELECTRICAL/THERMAL CONDUCTION.
7. *U1 NOT SOLDER HEATSINK TABS OF ITEM 36.*

Figure 7-16. Amplifier PWA, 2-Channel, Audio

Table 7-7. Parts List

FIG. & REF.	QUANTITY PER ASSEMBLY -01						DESCRIPTION	PART NO.	MFR. PART NO.	CODE IDENT. NO.
7-17	1						Power supply assy (see Fig. 7-7 for NHA)	201977-01		
1	1						Chassis, pwr sup	201935-01		
2	1						Xfmr, 120/240V primary	202756-01		
3	1						Screen cover	201936-01		
5	1						Cable tie, nylon	162297	760	
6 PSR1	1						Regulator, pwr sup	202719-01		
7	1						Plate, heat transfer	202334-01		
8 TB1	1						Barrier strip, 5-term	160220	5-140-Y	71785
9 TB2, TB3	2						Term strip, 8-lug, 2 to gnd	162304	56A	71785
11 J133 J134	2						Conn, 3-pin, male	160066	XLR-3-32	71468
12 J132	1						Conn, skt block, 26-position	160208	200512-2	00779
13 Ref J132	18						Skt, contact, female	160210	66105-4	00779
14 Ref J132	1						Skt guide, center, female	160212	200390-4	00779
15 Ref J132	1						Pin, guide, center, male	160213	200389-4	00779
16 P102	1						Conn, rcpt, 15-hole	160050	1625-15R1	27264
17 J201	1						Conn, ac power	160125	EAC-301	82389
18	12						Term, pin, 0.062 dia, female	160029	1561	27264
19 P109	1						Conn, 12-pin	160039	1625-12P	27264
20 Ref P109	2						Pin, conn, male	160028	1560	27264
21 F201, F202	2						Fuseholder, 3AG	162000	342004	75915

Table 7-1. Parts List

FIG. & REF.	QUANTITY PER ASSEMBLY -01						DESCRIPTION	PART NO.	MFR. PART NO.	CODE IDENT. NO.
7-17							Power supply assy (continued)	201977-01		
22 F201	1						Fuse, 3AG, 3.0A	162008	312003	75915
23 F202	Ref						Fuse, 3AG, 6.0A	162420	312006	75915
24 S201	1						Switch, slide	162111	518	83330
25	1						Clamp, cable, plastic, 5/16 id	112136	8943	83330
26	1						Clamp, 1/8, nylon	112315	CLN 1/8	51705
27	2						Grommet, rubber, 0.62 dia, 0.31 id	112144	2174	83330
28	.5 oz						Compound, heat sink, silicone	162180	340	71984
29	1						Clamp, cable, adhesive backed	162228	ABMS-AD	06383
31	1						Cord, ac power	160126	P-2392	82389
33	4						Screw, flh, 4-40 x 3/8	110011		
34	13						Screw, pnh, 6-32 x 1/2	110175		
35	2						Screw, pnh, 6-32 x 1/4	110174		
36	2						Screw, pnh, 6-32 x 3/8	110170		
37	8						Screw, truss hd, 6-32 x 1/4	110122		
38	4						Screw, pnh, 8-32 x 3/8	110171		
39	2						Screw, pnh, 4-40 x 1/4	110173		
40	2						Nut, hex, machine, 4-40	111052		
41	4						Nut, keps, ext lockwasher, 4-40	111062		
42	14						Nut, keps, ext lockwasher, 6-32	111115		
43	4						Washer, flat, #8	111004		
44	2						Lockwasher, ext t, #4	111032		
45	9						Lockwasher, int t, #6	111023		
46	3						Washer, flat, #6	111003		
47	4						Lockwasher, ext t, #8	111034		

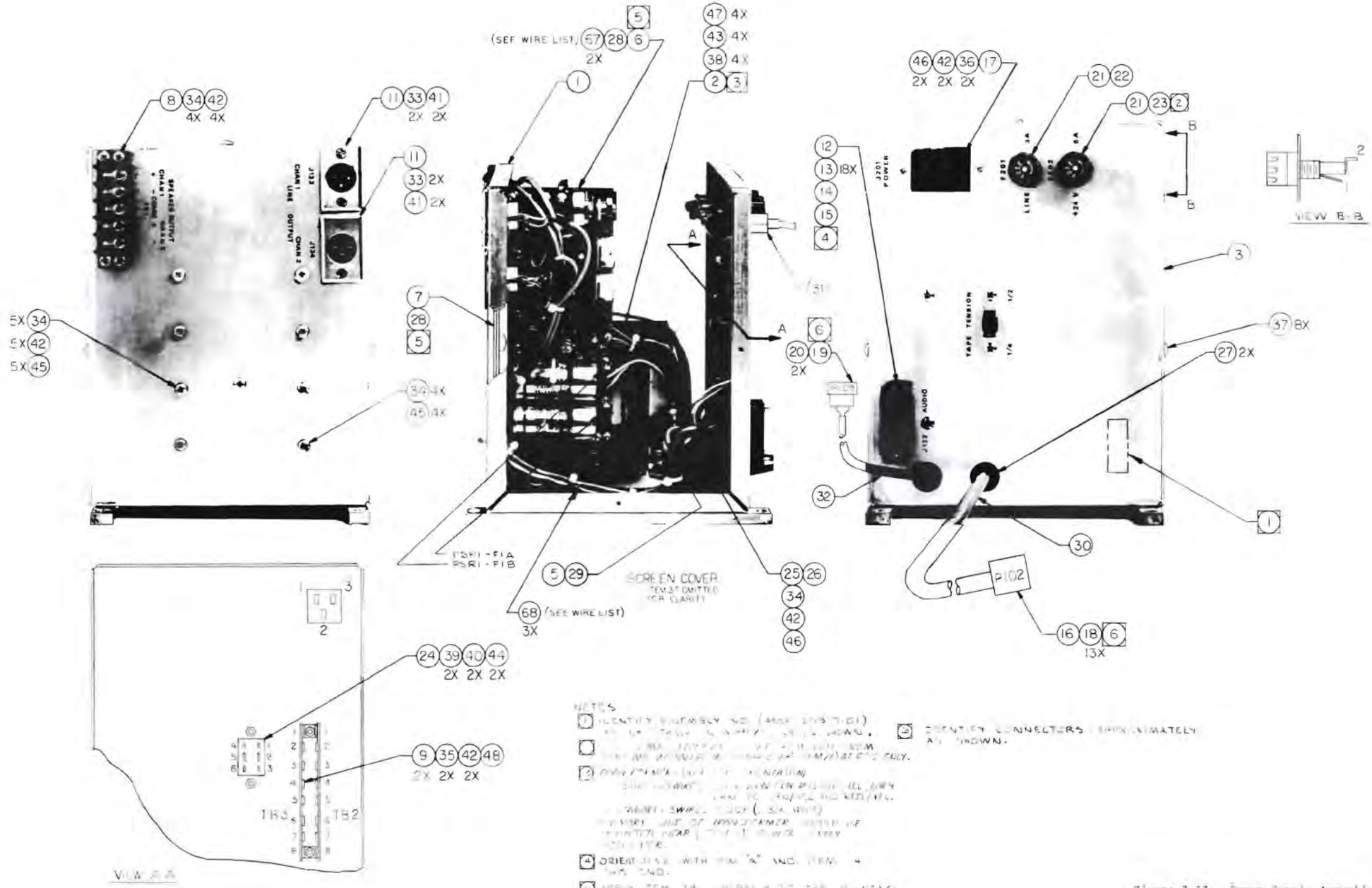

NOTES

1. IDENTIFY SUBASSEMBLY NO. (MODEL 285B-01) [illegible]
2. [illegible]
3. [illegible] (.5A [illegible])
4. ORIENT [illegible] WITH ITEM "A" INCL. ITEM 4 [illegible]
5. APPLY ITEM 18 [illegible] SURFACE OF ITEM 5 THAT MOUNTS TO ITEM 1.
6. IDENTIFY CONNECTORS APPROXIMATELY AS SHOWN.

Figure 7-17. Power Supply Assembly

Table 7-1. Parts List

FIG. & REF.	QUANTITY PER ASSEMBLY -01						DESCRIPTION	PART NO.	MFR. PART NO.	CODE IDENT. NO.
7-18	Ref						Playback head stack assy, Full-trk, 0.25 in (see Fig. 7-13 for NHA)	202348-01		
1	1						Playback head assy	200602-03		
4	1						Head mtg platform	200581-01		
5	1						Head cable assy	202347-01		
	1						. Conn, plug, 9-pin	160032	125-220	02660
	1						. Cable w/ plug	161056	P139-070	11983
6	2						Screw, pnh, 6-32 x 3/4	110074		
7	2						Setscrew, ovp, 6-32 x 1/4	110110		
8	1						Spring, compression	112509		
9	1						Screw, pnh, 6-32 x 1.00	110076		

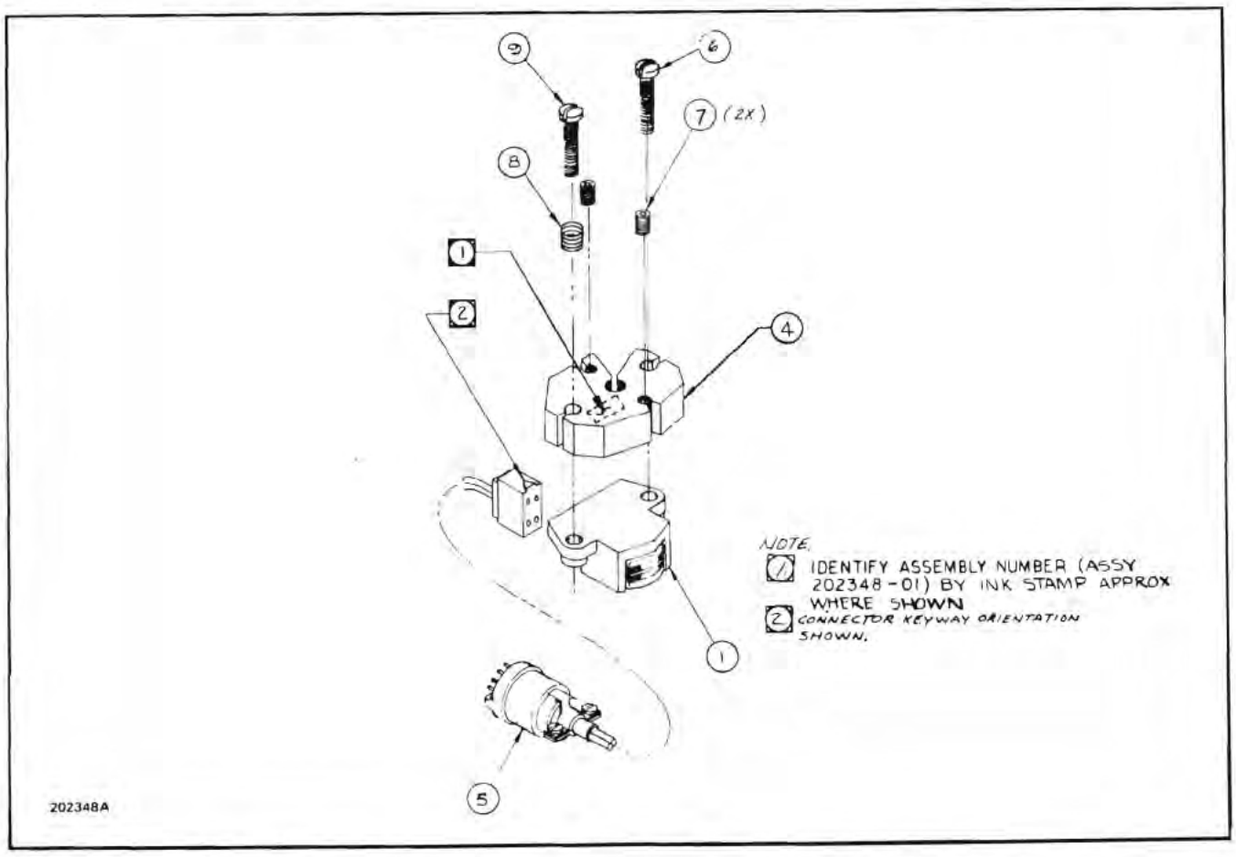

Figure 7-18. Playback Head Stack Assembly, Full-Track, 0.25-inch

Table 7-1. Parts List

FIG. & REF.	QUANTITY PER ASSEMBLY -01						DESCRIPTION	PART NO.	MFR. PART NO.	CODE IDENT. NO.
7-19	1						Harness assy, audio intcon (see Fig. 7-15 for NHA)	201978-01		
1 J130	1						Conn, 22/44 pin	160217	SAC221D/I-2 2VH22/IAN5	31514 05574
2 P131, P132	2						Conn, pin block, 26 pos	160209	200513-2	00779
3 Ref P131, P132	42						Contact, pin, male	160211	66103-4	00779
4 Ref P131, P132	2						Pin, guide center, male	160213	200389-4	00779
5 Ref P131, P132	2						Socket guide, center, female	160212	200390-4	00779
6 Ref P131, P132	2						Clamp, strain relief, short	112431	201229-1	00779
7 J114	1						Conn, female, 9-pin	160089	126-221	02660

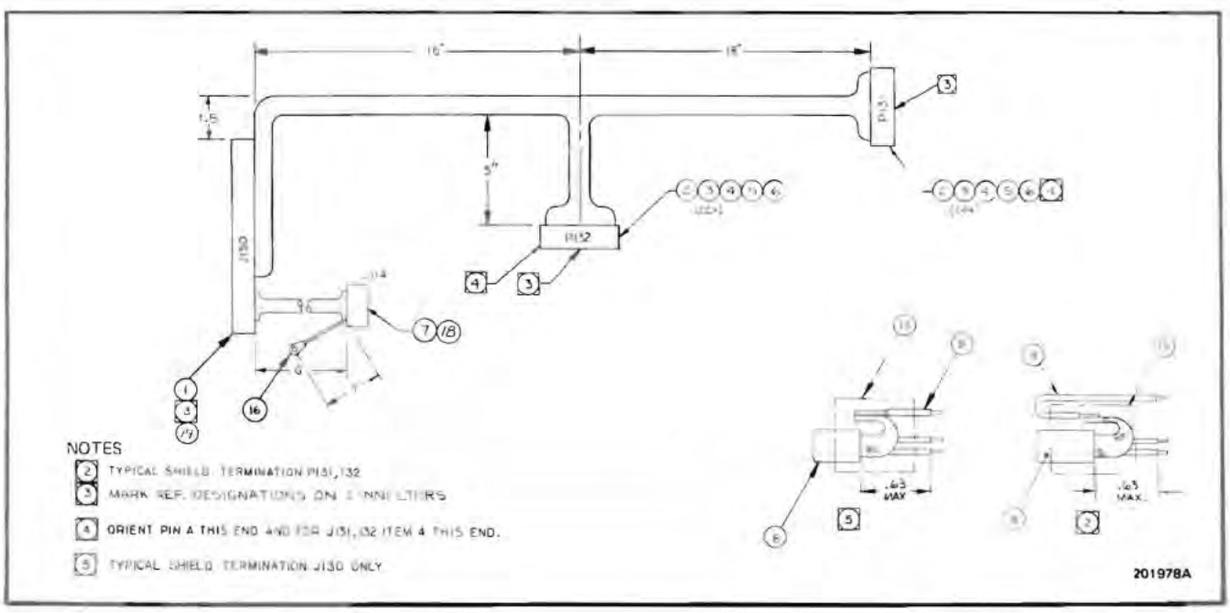

Figure 7-19. Harness Assembly, Audio Interconnect

Table 7-1. Parts List

FIG. & REF.	QUANTITY PER ASSEMBLY -01						DESCRIPTION	PART NO.	MFR. PART NO.	CODE IDENT. NO.
7-20							Scrape filter mount assy	201929-01		
1	1						Mount, scrape filter	201934-01		
3	2						Bearing, flanged, ball, 0.1875 id x 0.3125 od	112005	S5632-Class 3 FCHHE-LO-1	31633
4	1						Roller, scrape filter	502010302-02		
6	1						Grip ring	112237	5555-18 PCG-4	79136

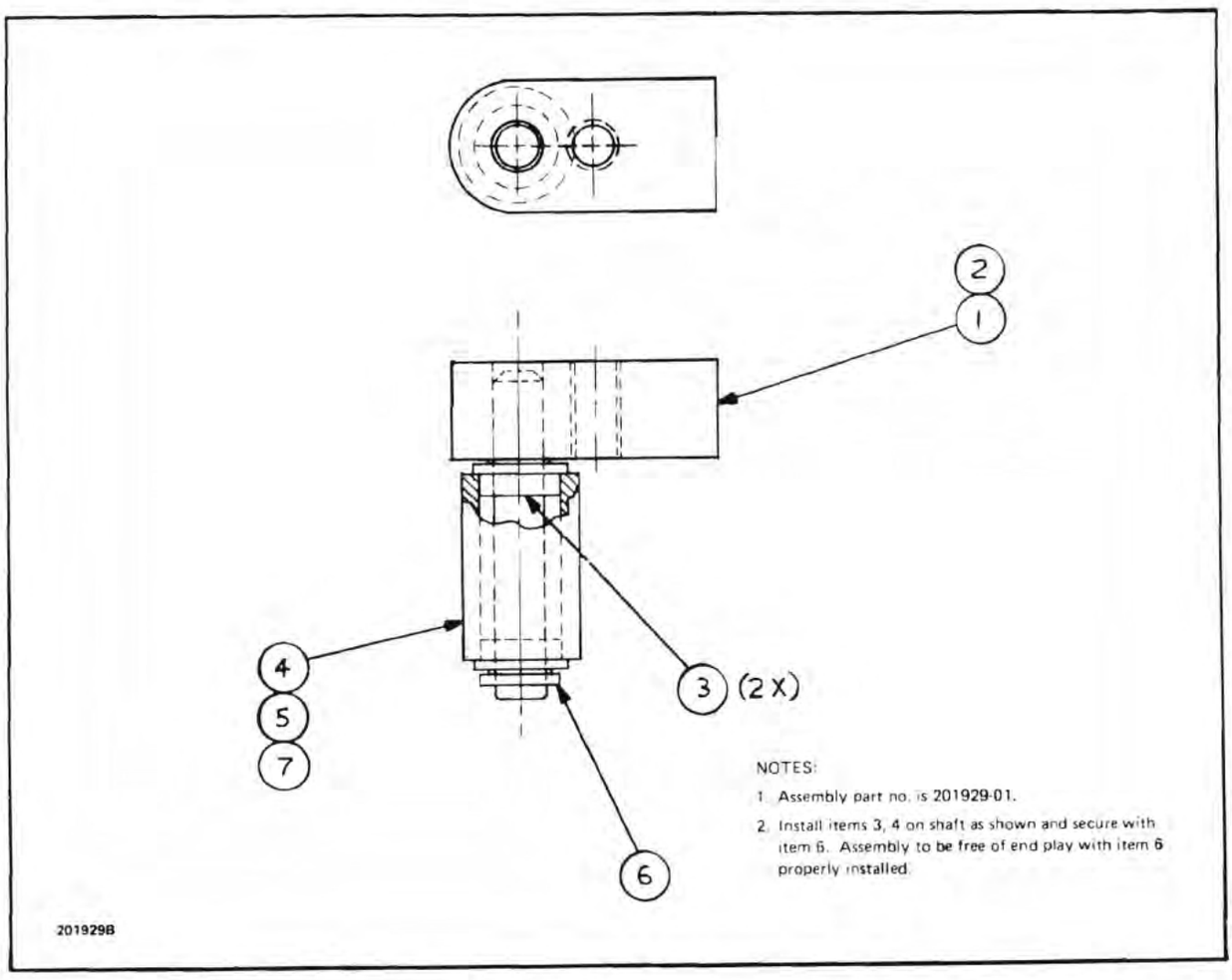

Figure 7-20. Scrape Filter Mount Assembly

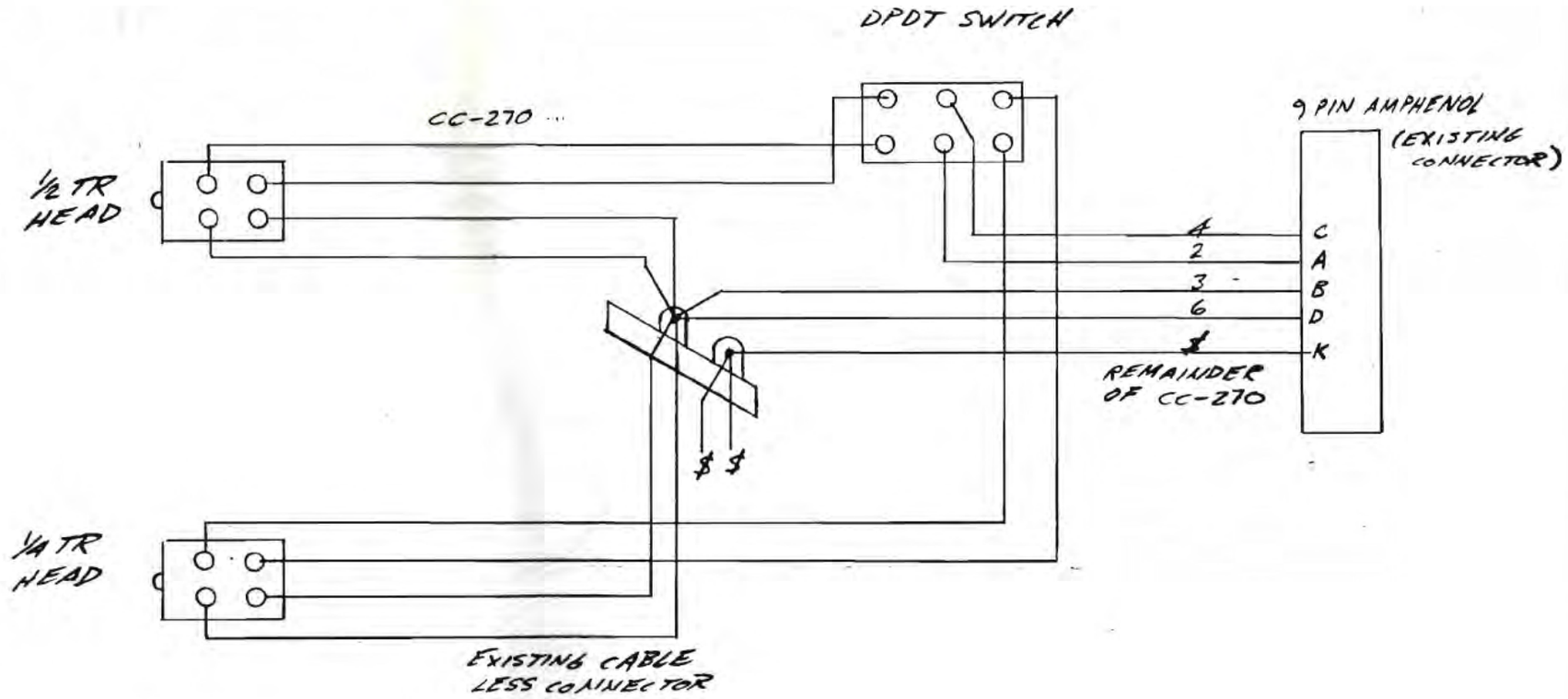

PARTS

1 - NORTRONICS CC-270
1 - QK-91
1 - NORTRONICS 8606
1 - 2 TERM STRIP

RCA	SILVER SPRING MD.		
SCULLY 255B 1/4/1/2 TR HEAD MOD.			
DR - G.S.			
DATE - 8/78	SCALE - —	APP. -	250-109